RIDING TROWEL

HDX600

PARTS & DECALS MANUAL

Manual Part #: 073422P | Revision: J
Language: English | Original Instructions

For information regarding the following, please see the “HDX600 - Safety & Operator Manual”

- Warranty Information
- Dealer Information
- How to identify the Model / Serial Numbers on the machine
- Engine Detail

HDX600 Riding Trowel

PARTS & DECAL MANUAL

This manual covers the products listed below:

Part No.	Description
074140	HDX600 Riding Trowel, HATZ 50HP Diesel T4, 8ft, 6-Boss

Table of Contents

Sect No.	Title	Page
	Table of Contents	**4**
1	**PARTS**	**5**
	Factory Service Information	6
	Replacement Part Procedure	7
	General Arrangement (074140)	8
	Seat Frame Assembly (068180)	10
	Main Frame Assembly (074142)	14
	Engine Assembly (068290)	16
	Rotor Assembly - Left Hand (074145)	18
	Rotor Assembly - Right Hand (074144)	20
	Bearing Block Assembly (064260)	22
	Lower Rotor Assembly - Left Hand (073512)	24
	Lower Rotor Assembly - Right Hand (073513)	25
	Spider Assembly - Left Hand (060538)	26
	Spider Assembly - Right Hand (060541)	27
	Service Parts, Hydraulic Filters	28
	Service Parts, Engine Filters	29
	Hydraulic Schematic	30
	Hydraulic Schematic, Steering	32
	Hydraulic System	33
2	**DECALS**	**34**
	Decals - Front (Kit #: 069101)	35
	Decals - Rear (Kit #: 069101)	36
	Decals - Top (Kit #: 069101)	37
	Decals - Right / Left (Kit #: 069101)	38
	Revision Detail	39

SECTION 1: PARTS

SECTION 1 PARTS

Factory Service Information

This section contains the illustrated drawings and parts list for help in identifying and/or ordering replacement parts for your machine. Follow the instructions in the front section of this manual “Ordering Parts” when ordering replacement parts to ensure prompt and accurate delivery.

NOTE

All set screws have blue (LOC-TITE™) applied at the factory. If set screw is removed or loosened for any reason re-apply blue (LOC-TITE™).

NOTE

All grease fittings are capped with CAP PLUG GC-5 (AEC PN 015692) to protect the fitting. If cap becomes missing or damaged replace it as soon as possible.

NOTE

Anti-Seize is applied at the factory to all drive line coupling, gear box main and counter shafts and pitch control threaded rod assemblies. If these parts are disassembled re-apply a light coat of a graphite based anti-seize.

ALL REFERENCES MADE TO LEFT/RIGHT SIDES IN THIS MANUAL ARE SITTING ON MACHINE (SOM)
[i.e. Left / Right are in reference from a sitting position on the machine]

We recommend AEC quality replacement parts, available from the AEC Customer Service Department or your nearest AEC Dealer.

Part numbers are subject to change without notice. Part numbers might be different outside of the United States of America. Use part numbers listed in the applicable parts list table when you place your order. If a part number changes, the AEC Customer Service Department or your nearest AEC dealer will have the latest part number for the replacement part.

Remember when you order replacement parts, you will need your **MODEL NUMBER** and **SERIAL NUMBER**. These are the numbers that you have recorded in the UNIT ID section of the "Safety and Operations Manual" or by looking on the unit Identification Plate. Please order replacement parts by the appropriate part number, not the item number.

This manual contains an illustrated parts list for help in ordering replacement parts for your machine. Follow the instructions below when ordering parts to ensure prompt and accurate delivery:

1. All orders for service parts - include the serial number for the machine. Shipment will be delayed if this information is not available.
2. Include correct description and part number
3. Specify exact shipping instructions, including the preferred routing and complete destination address.
4. **DO NOT** return parts to AEC without receiving written authorization from AEC. All authorized returns must be shipped pre-paid.
5. When placing an order, please contact the AEC Dealer nearest you.

NOTE

All information, specifications, and illustrations in this manual are subject to change without notice and are based on the latest information at the time of publication.

General Arrangement (074140)

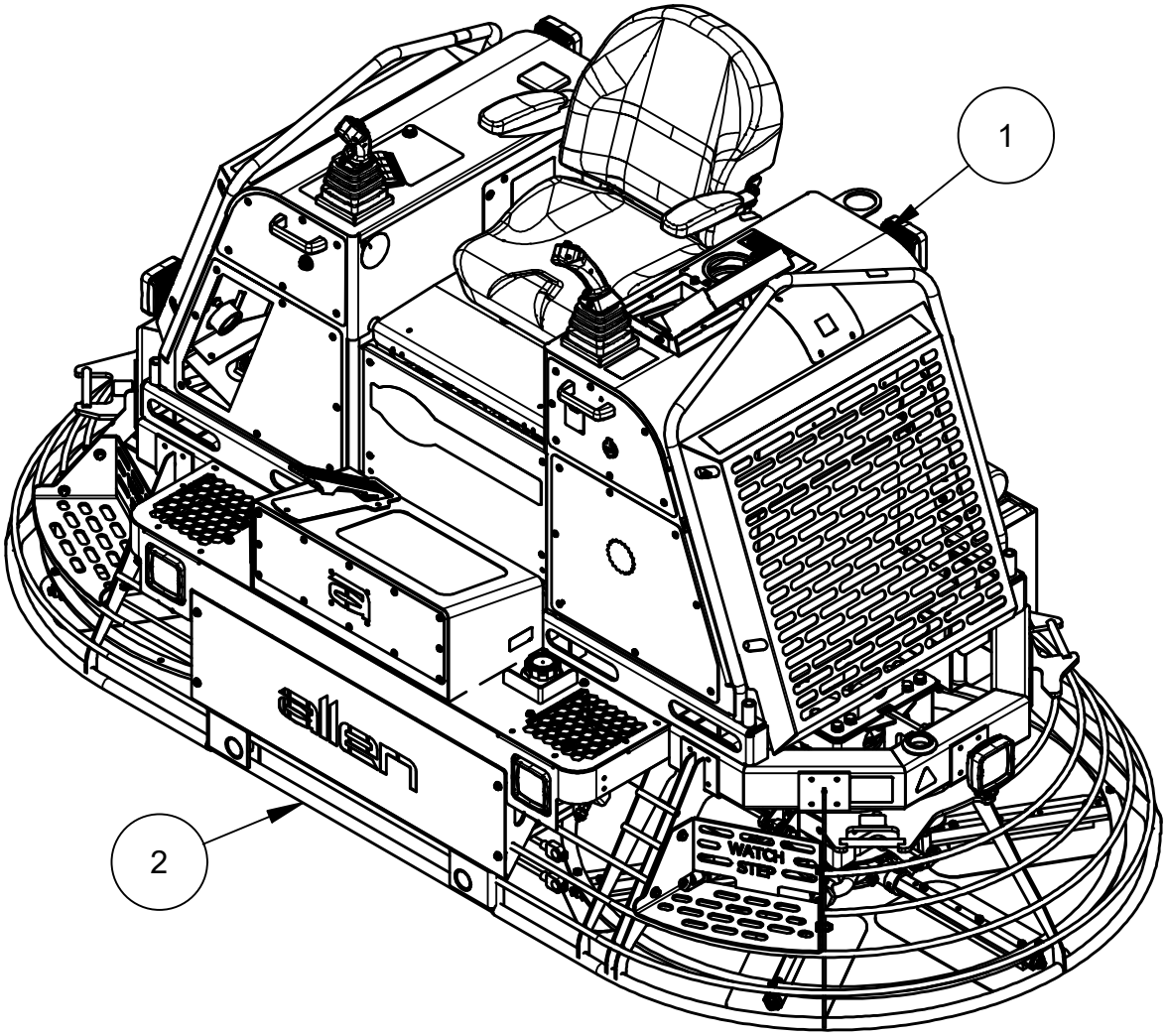

General Arrangement (074140) Parts List

ITEM	PART NO.	DESCRIPTION	QTY
-	074140	Assembly, HDX600 - 6 Boss	-
1	074142	Assembly, Main Frame	1
2	068180	Assembly, Seat Frame	1
-	065168	Harness F/ Lights	1
-	069101	Kit, Decal	1
-	070072	Main Wiring Harness	1
-	070308	Kit, Component	1
-	070316	Kit, Hydraulic Fitting	1
-	070317	Kit, Hydraulic Hose	1

Seat Frame Assembly (068180)

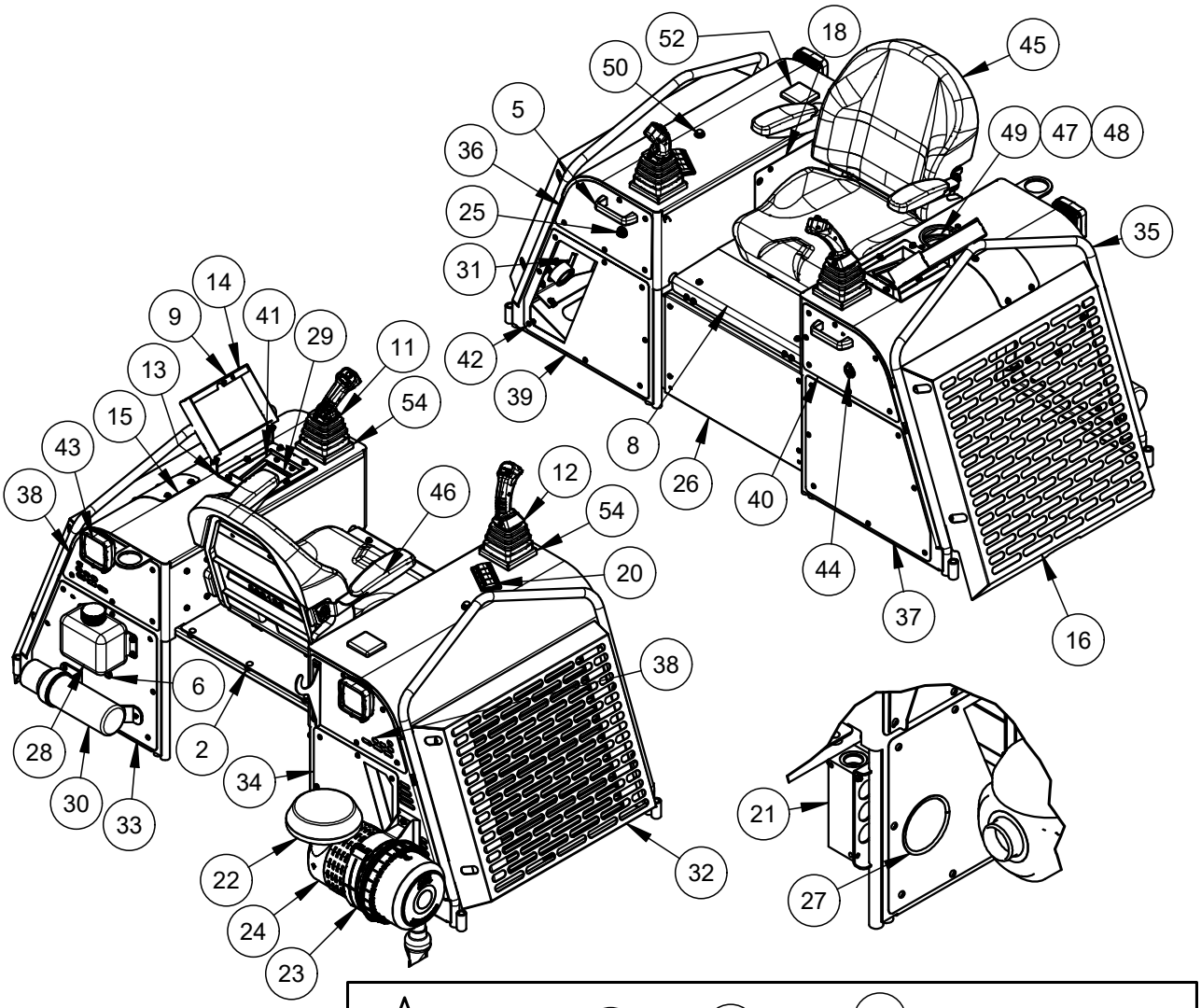

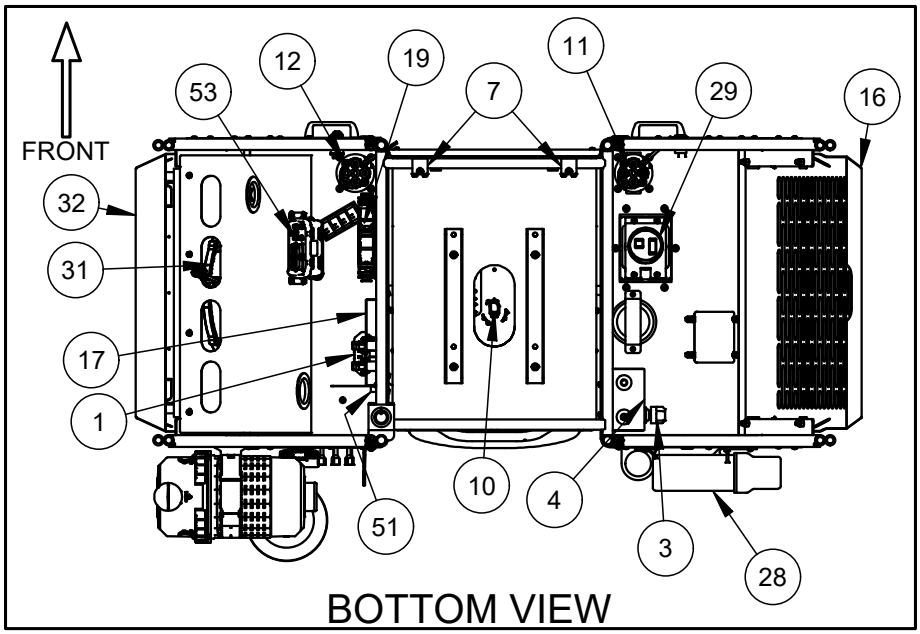

Seat Frame Assembly (068180)

ITEM	PART NO.	DESCRIPTION	QTY
1	-	FUSE BLOCK	1
2	047665	RUBBER BUMPER	3
3	047886	CAP, FILLER BREATHER	1
4	048595	TANK, VENT	1
5	048678	HANDLE, LOAD RATED NYLON	2
6	048681	RUBBER GROMMET	1
7	049550	CONNECTOR, SEAT LID PIVOT	2
8	056224	SEAT LID WELDMENT	1
9	056920	MAGNETIC LATCH	1
10	061374	SWITCH, FOR 069874 SEAT - NORMALLY OPEN	1
11	064510	JOYSTICK, LH	1
12	064511	JOYSTICK, RH	1
13	064525	BRACKET, LH HINGE FOR ENGINE DISPLAY COVER	1
14	064526	COVER, ENGINE DISPLAY	1
15	064528	COVER, RADIATOR ACCESS POINT FOR SEAT FRAME ASSEMBLY	1
16	064760	GUARD, END SEAT FRAME	1
17	065133	TOP, GROUNDING BOX	1
18	065134	FRONT COVER PLATE, FOR GROUNDING LUG BOX	1
19	065139	CONTROLLER	1
20	065143	4 SWITCH BLOCK KIT	1
21	065144	HEADER, MANIFOLD	1
22	065188	AIR BONNET, FOR HATZ H50	1
23	065189	HATZ AIR CLEANER 4H50 BAND	1
24	065190	HATZ AIR CLEANER 4H50 BREATHER	1
25	065191	KEY SWITCH, FOR HATZ ENGINE	1
26	065489	COVER, FRONT CENTER	1
27	065983	RUBBER TRIM CUT 13 1/2” LONG FOR REAR RH SEAT COVER	1
28	066028	COOLANT RECOVERY BOTTLE F/ HATZ ENG.	1
29	066227	MURPHY CONTROLLER, PV380	1
30	066255	MANUAL TUBE	1
31	066911	SUB-ASSEMBLY, OIL COOLER AND MOUNTING	1
32	066913	COVER, RH SEAT FRAME OVER COOLER	1
33	068178	COVER, REAR LH SEAT FRAME	1
34	068181A	COVER, REAR RH BOTTOM	1
35	068320	WELDMENT, SEAT FRAME	1
36	068366	COVER, TOP RH FRONT SEAT FRAME	1

Seat Frame Assembly (068180) Continued

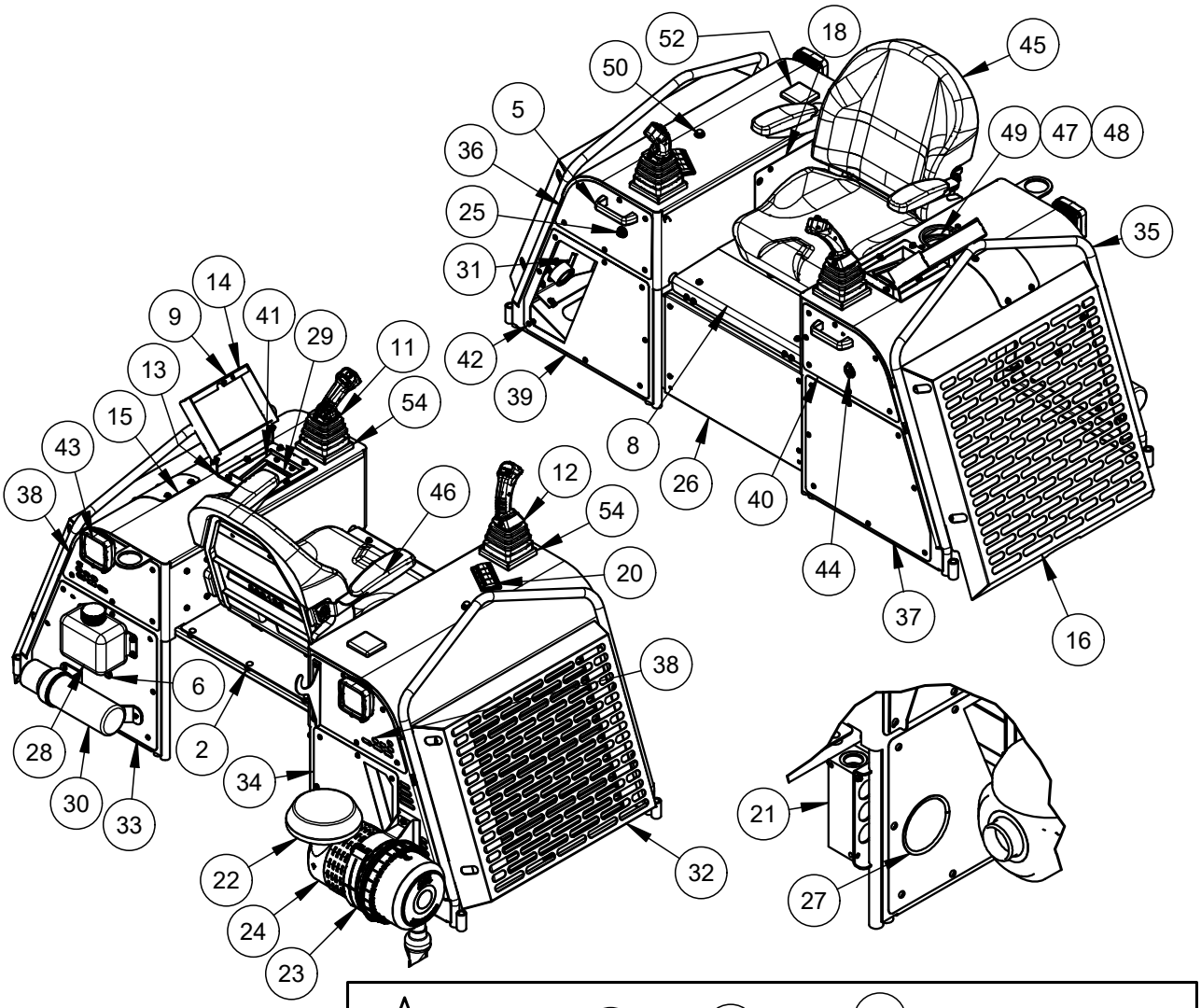

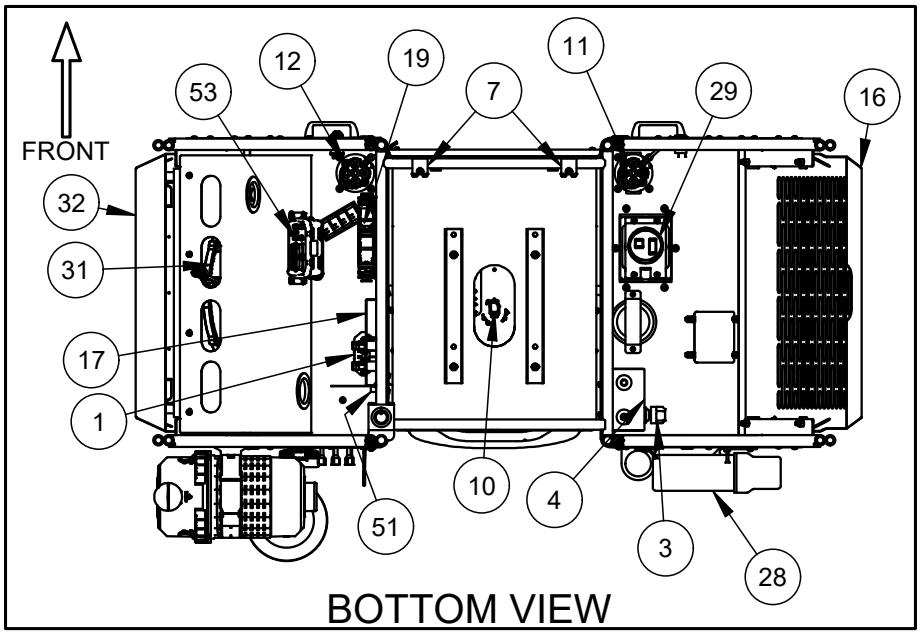

Seat Frame Assembly (068180) Continued

ITEM	PART NO.	DESCRIPTION	QTY
37	068367	COVER, REAR LH SEAT FRAME	1
38	068368	COVER, TOP REAR RH/LH SEAT FRAME	2
39	068369	COVER, FRONT RH BOTTOM	1
40	068371	COVER, TOP LH FRONT SEAT FRAME	1
41	069227	PANEL, FOR ENGINE DISPLAY	1
42	069737	FASTENER, SCREW 1/4-20 X 3/4	78
43	069835	LIGHT, LED 1200 LUMENS 12 VDC (1.3 AMP)	2
44	069850	USB RECEPTACLE 12VDC	1
45	069874	SEAT, RIDER	1
46	069875	ARM RESTS, FOR 069874 SEAT	1
47	071123	RUBBER TRIM CUT 12 500” LONG FOR TOP SECTION OF CUP HOLDER	1
48	071124	RUBBER TRIM CUT 10.500” LONG FOR MIDDLE SECTION OF CUP HOLDER	1
49	074251	WELDMENT, CUP HOLDER	1
50	076952	LIGHT RED INDICATOR	1
51	077525	BUZZER, 12V INDICATOR	1
52	077893	ANTENNA, FOR TELEMATICS FOR HDX RIDERS	1
53	077894	CONTROLLER, TELEMATICS	1
54	080279	RISER, FOR JOYSTICK	2

Main Frame Assembly (074142)

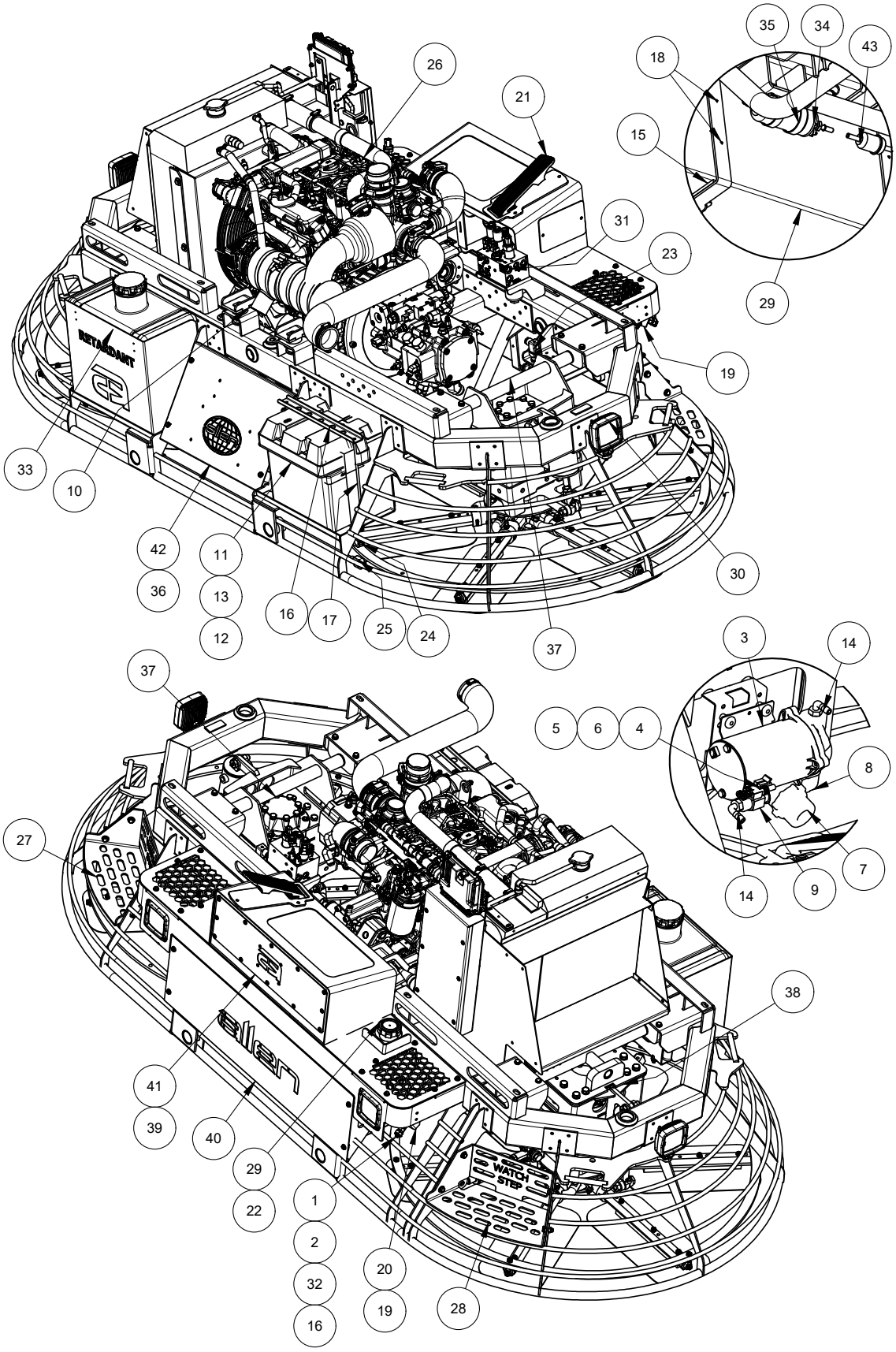

Main Frame Assembly (074142) Parts List

ITEM	PART NO.	DESCRIPTION	QTY
1	012702	TIP, 80° X 0.10 GPM BRASS SPRAY	2
2	012705	RETAINER, BRASS SPRAY TIP	2
3	033735	PUMP, SPRAY SYSTEM	1
4	038641	HOUSING, 2 POSN WEA PAK FEMALE	1
5	038644	TERMINAL, 16-14 WEA PAK FEMALE	2
6	038648	SEAL, 16-14 AWG GREY CAVITY	2
7	040209	FILTER, RETARDANT SPRAY SYSTEM	1
8	040387	ELBOW, 3/8 BRASS 90° STREET	1
9	040388	FITTING, 3/8X1/4 BRASS FM TO FM REDUCER	1
10	043364	ISOLATOR, MOTOR MOUNT	4
11	046696	BOX, STANDARD BATTERY	1
12	047294	PAD, 7-7/16 X 5-11/16 X 1-1/2	2
13	047604	BATTERY, 700CCA 12V	1
14	047933	ELBOW, 1/4 PUSHLOK X 1/4 NPT PLASTIC	2
15	048562	CUSHION, BOTTOM TANK (RUBBER)	2
16	048563	CHANNEL, BATTERY HOLD-DOWN	1
17	048589	ROD ALL THREAD, 1/4-20 BATTERY HOLD DOWN	2
18	048676	PLUG, RUBBER	8
19	049981	WELDMENT, RH SPRAY BRACKET	1
20	049982	WELDMENT, LH SPRAY BRACKET	1
21	063341	FOOT PEDAL ELECTRONIC	1
22	064501	CUSHION, TOP FUEL TANK (RUBBER)	1
23	065141	FILTER, HIGH PRESSURE	1
24	065847	BATTERY CABLE, POSITIVE 2AWG	1
25	065848	BATTERY CABLE, NEGATIVE 2 AWG	1
26	068290	ASSEMBLY, ENGINE 50 HP HATZ	1
27	068370	STEP, RH	1
28	068375	STEP, LH	1
29	069007	ASSEMBLY, FUEL TANK	1
30	069835	LIGHT, LED 1200 LUMENS 12 VDC (1.5 AMP)	4
31	069958	MANIFOLD, WITH FILTER STEERING AND PITCH	1
32	071531	NOZZLE BODY, MALE STRAIGHT TEE JET BRASS	2
33	071536	ASSEMBLY, TANK 7 GALLON RETARDANT	1
34	072559	FUEL PUMP	1
35	072560	FUEL PUMP MOUNT BAND	2
36	072856	PLATE, BACKER FOR EMBLEM PLATE RIDERS	1
37	074144	ASSEMBLY, RH (SOM) ROTOR 6 BOSS	1
38	074145	ASSEMBLY, LEFT HAND (SOM) ROTOR 6 BOSS	1
39	074535	PLATE, BACKING FOR SMALL SYMBOL RED	1
40	075222	PLATE, COVER FRONT BOTTOM CENTER	1
41	075226	COVER, FRONT DECK	1
42	075259	COVER, REAR CENTER	1
43	078629	FUEL FILTER, IN-LINE	1

Engine Assembly (068290)

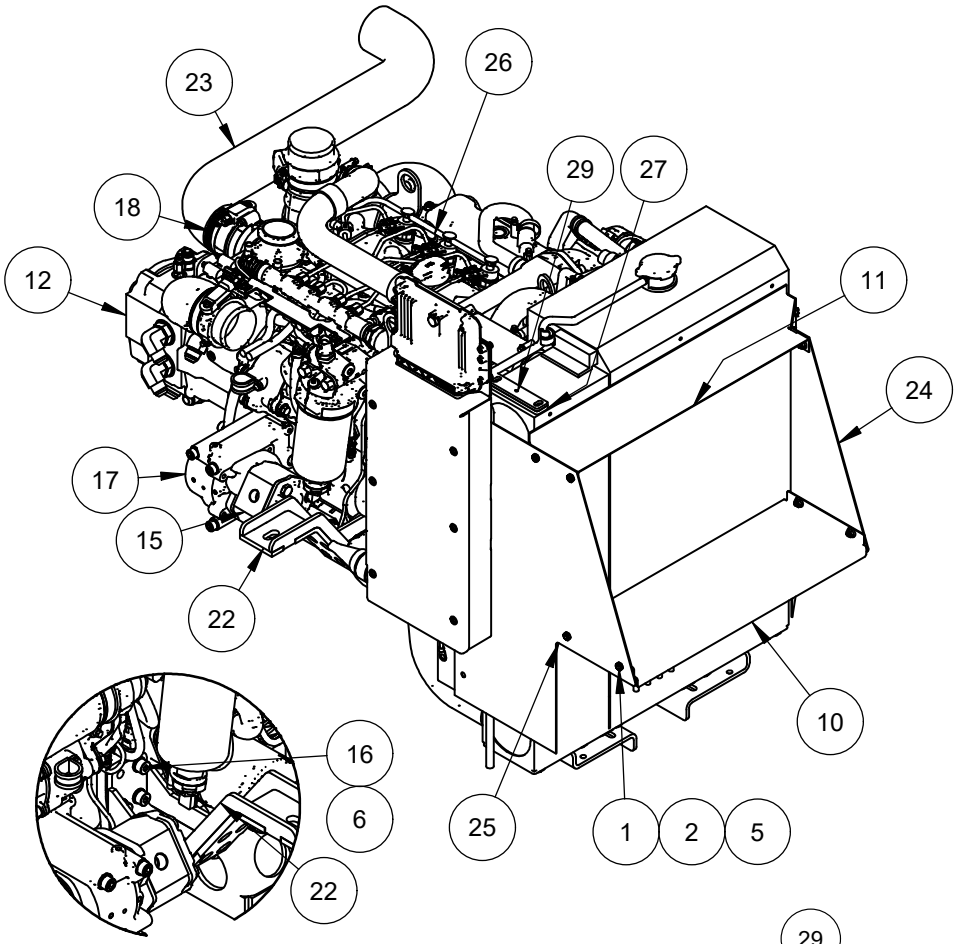

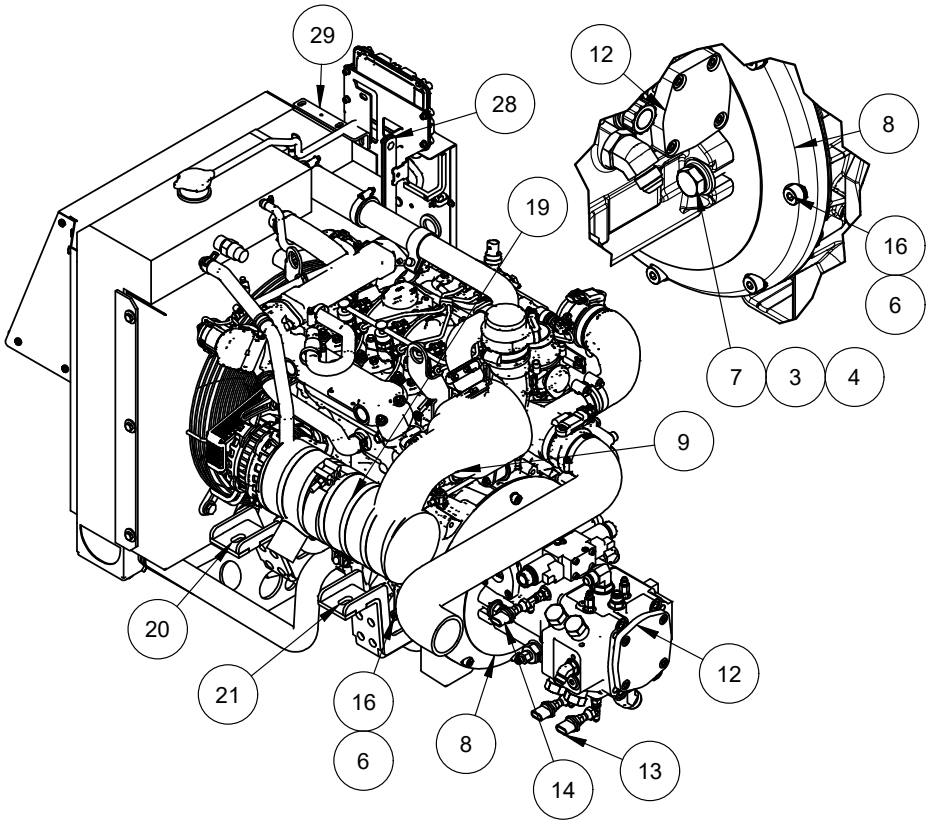

Engine Assembly (068290) Parts List

ITEM	PART NO.	DESCRIPTION	QTY
1	010001	FASTENER, HHCS 1/4-20 X 1/2	9
2	010081	FASTENER, FW 1/4	9
3	010095	FASTENER, LW 5/8	2
4	012982	FASTENER, FW 5/8” ZINC PLATED	2
5	020542	FASTENER, HEX NUT STOVER LOCK 1/4-20	9
6	021072	FASTENER, LW M10	17
7	029311	FASTENER, HHCS 5/8-11 X 1 3/4	2
8	064357	ASSEMBLY, HOUSING AND COUPLING	1
9	064873	TURBO WRAP BLANKET FOR HATZ ENGINE	1
10	065126	COVER, BOTTOM RADIATOR SHROUD	1
11	065127	COVER, TOP RADIATOR SHROUD	1
12	065138	PUMP, HYDRAULIC	1
13	077889	SENSOR, PRESSURE ROTOR MOTOR	2
14	077895	SENSOR, CHARGE PRESSURE	1
15	065140	PUMP, AUXILIARY	1
16	065243	FASTENER, SHCS M10 X 1.5 X 30 MM	17
17	065398	AUXILIARY DRIVE FOR HATZ H50 ENGINE	1
18	065570	HOSE CLAMP, HOSE CLAMP 2-1/8” TO 4”	1
19	066148	DOC WRAP FOR HATZ ENGINE	1
20	068287	ENGINE MOUNT, REAR LH	1
21	068293	ENGINE MOUNT, REAR RH	1
22	068296	ENGINE MOUNT, FRONT LH	1
23	069233	HOSE, FOR AIR INTAKE FOR HATZ ENGINE	1
24	069856	SHROUD, REAR RADIATOR FOR HATZ ENIGNE	1
25	069857	SHROUD, FRONT RADIATOR FOR HATZ ENGINE	1
26	070325	KIT, HATZ ENGINE 3H50TIC	1
27	077323	SPACER, TOP FOR FUSE PANEL RELOCATION HATZ 3 CYL	1
28	080277	PLATE, FUSE PANEL RELOCATION HATZ 3 CYLINDER	1
29	080278	BRACKET, TOP FOR FUSE PANEL RELOCATION HATZ 3 CYL	1
-	065854	OIL FILTER	1
-	078612	FUEL FILTER, ELEMENT AND O-RING	1
-	078629	PRE FUEL FILTER, IN-LINE	1
-	080622	TURBO OIL SUPPLY LINE, BRAIDED FLEX LINE (REPLACEMENT)	1

Hatz Engine, Connector Sets (Replacement Parts)

PART NO.	DESCRIPTION
082457	CONNECTOR SET WFS (DUAL FILTER)
082458	CONNECTOR SET WFS (SINGLE FILTER)
082459	CONNECTOR SET AFDPS
082460	CONNECTOR SET CLS, START
082461	CONNECTOR SET OPS, FLPS1
082462	CONNECTOR SET BPS
082463	CONNECTOR SET INJ, MEU, CRS, DRV
082464	CONNECTOR SET ATS, CTS
082465	CONNECTOR SET RPS
082466	CONNECTOR SET CAS
082467	CONNECTOR SET EGR
082468	CONNECTOR SET TV
082469	CONNECTOR SET PFM
082470	CONNECTOR SET STARTER
082471	CONNECTOR SET DPF T1, T2
082472	CONNECTOR SET STARTER MKS
082473	CONNECTOR SET DPF DIFF
082474	CONNECTOR SET CRS

Bearing Block Assembly (064260)

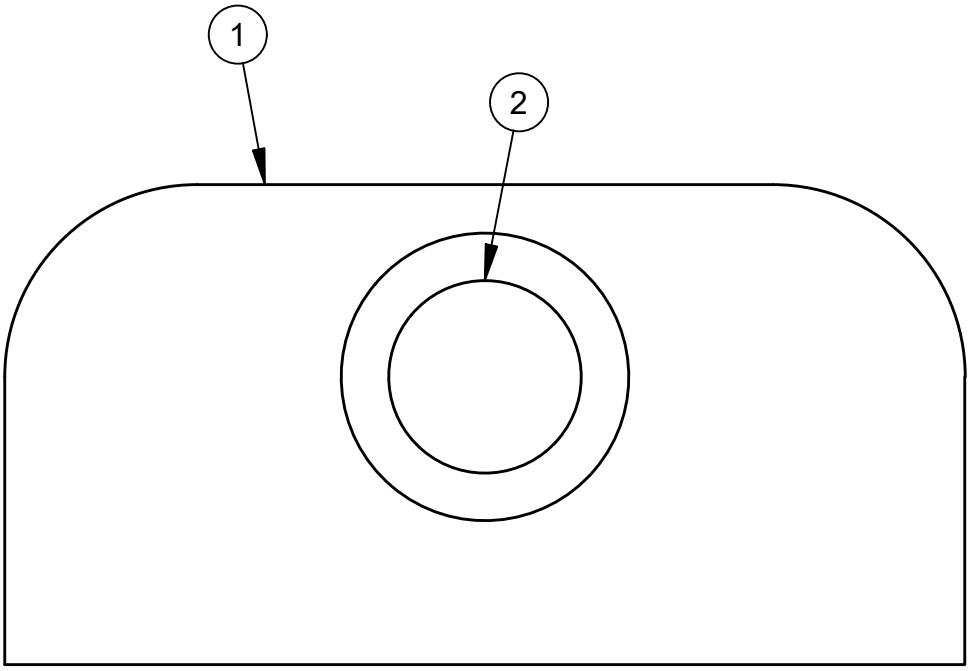

ITEM	PART NO.	DESCRIPTION	QTY
1	064259	BLOCK, FOR BEARING BLOCK	1
2	068157	FLANGED BEARING, 1” ID X 1 LONG OIL IMPREGNATED BRONZE	1

Rotor Assembly - Left Hand (074145)

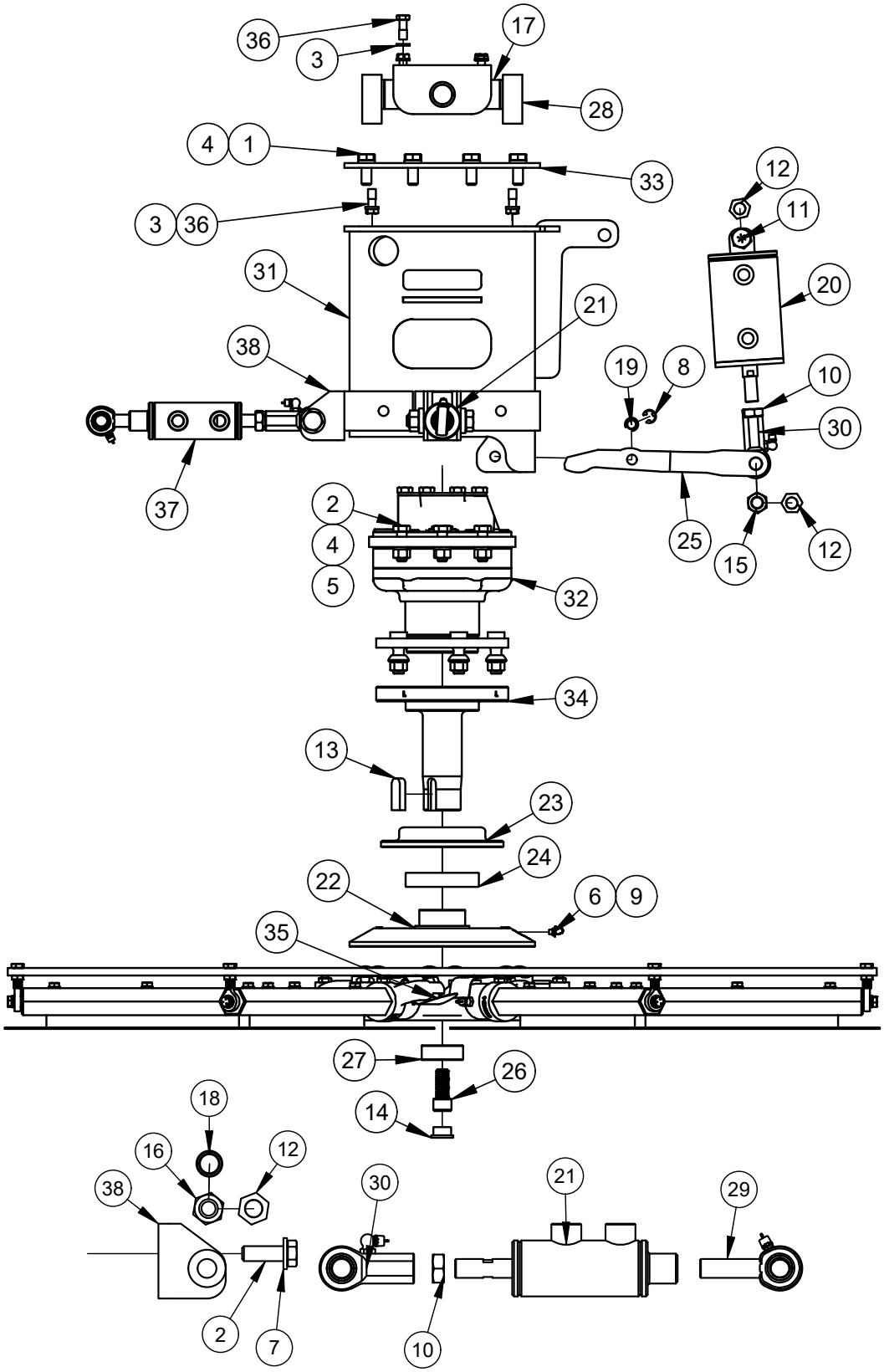

DETAIL HYD
CYLINDER

Rotor Assembly - Left Hand (074145)

ITEM	PART NO.	DESCRIPTION	QTY
1	010068	FASTENER, HHCS 1/2-13 X 1-1/4	12
2	010069	FASTENER, HHCS 1/2-13 X 1-1/2	8
3	010091	FASTENER, LW 3/8	8
4	010093	FASTENER, LW 1/2	18
5	010106	FASTENER, NUT HEX 1/2-13	6
6	010513	FITTING, 1/4-28 STR GREASE	1
7	011490	FASTENER, FW HARDENED 1/2	2
8	015677	RING, Ø7/16 E-STYLE RETAINING	2
9	015692	CAP, Ø1/4 RED GREASE	1
10	020688	FASTENER, JAM HEX NUT 5/8-18 RH	3
11	027969	FASTENER, HHCS 5/8-18 X 2	1
12	043269	FASTENER, HEX NUT STOVER 5/8-18	4
13	046231	KEY, ROTOR SHAFT	1
14	046646	PLUG, 7/8 THREAD PROTECT CAP	1
15	047354	FASTENER, HHCS 5/8-18 X 2-1/4	1
16	048339	FASTENER, HHCS 5/8-18 X 3	2
17	048622	WELDMENT, CROSSHEAD L/R AND F/R	1
18	048627	SPACER, STEERING CONNECTION	4
19	048628	PIN, YOKE ARM	1
20	048659	PITCH CYLINDER HDX SERIES 3” BORE 1 1/2” STROKE	1
21	048660	CYLINDER, 1.5 X 0.625 STEERING	1
22	049537	PLATE, PRESSURE 6 BOSS	1
23	049599	BEARING CAP	1
24	049697	BEARING FOR SPIDER ASSEMBLY	1
25	049698	YOKE FOR PITCH ARM	1
26	064252	FASTENER, SHCS 5/8-11 X 1 1/2 RH THREAD	1
27	064253	WASHER, RETAINING	1
28	064260	BEARING ASSEMBLY WITH BRONZE BEARING (068157 REPLACEMENT)	4
29	065446	ROD END, MALE 5/8	2
30	066188	ROD END, FEMALE 5/8	3
31	068031	WELDMENT, HYD. MOTOR MOUNT LH	1
32	068049	MOTOR, HYDRAULIC	1
33	069549	PLATE, TOP FOR LH ROTOR ASSEMBLY	1
34	069832	SHAFT, ROTOR LH SOM	1
35	073512	SPIDER ASSEMBLY, LH	1
36	074068	FASTENER, HHCS 3/8-16 X 1	8
37	074435	CYLINDER, 1.5 X 1.25 STEERING	1
38	076631	CHANNEL, CYLINDER ROD END CONNECTOR	2

Rotor Assembly - Right Hand (074144)

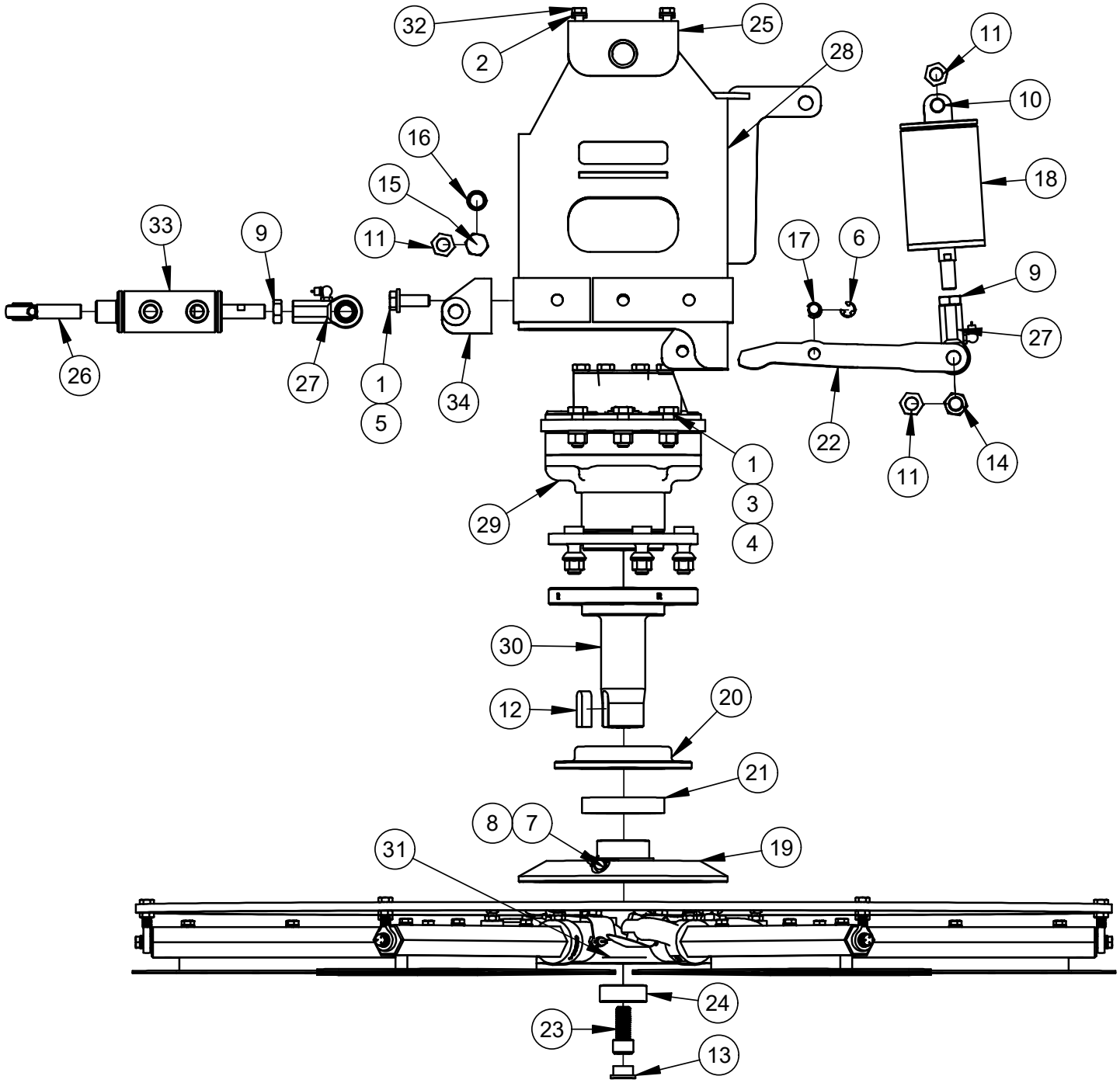

Rotor Assembly - Right Hand (074144)

ITEM	PART NO.	DESCRIPTION	QTY
1	010069	FASTENER, HHCS 1/2-13 X 1-1/2	7
2	010091	FASTENER, LW 3/8	4
3	010093	FASTENER, LW 1/2	6
4	010106	FASTENER, NUT HEX 1/2-13	6
5	011490	FASTENER, FW HARDENED 1/2	1
6	015677	RING, Ø7/16 E-STYLE RETAINING	2
7	015681	FITTING, 1/8-27 NPT 90° GREASE	1
8	015692	CAP, Ø1/4 RED GREASE	1
9	020688	FASTENER, JAM HEX NUT 5/8-18 RH	2
10	027969	FASTENER, HHCS 5/8-18 X 2	1
11	043269	FASTENER, HEX NUT STOVER 5/8-18	3
12	046231	KEY, ROTOR SHAFT	1
13	046646	PLUG, 7/8 THREAD PROTECT CAP	1
14	047354	FASTENER, HHCS 5/8-18 X 2-1/4	1
15	048339	FASTENER, HHCS 5/8-18 X 3	1
16	048627	SPACER, STEERING CONNECTION	2
17	048628	PIN, YOKE ARM	1
18	048659	PITCH CYLINDER HDX SERIES 3” BORE 1 1/2” STROKE	1
19	049537	PLATE, PRESSURE 6 BOSS	1
20	049599	BEARING CAP	1
21	049697	BEARING FOR SPIDER ASSEMBLY	1
22	049698	PITCH YOKE ARM	1
23	064251	FASTENER, SHCS 5/8-11 X 1 1/2” LONG LH THREAD	1
24	064253	WASHER, RETAINING	1
25	064260	BEARING ASSEMBLY WITH BRONZE BEARING (068157 REPLACEMENT)	2
26	065446	ROD END, MALE 5/8	1
27	066188	ROD END, FEMALE 5/8	2
28	068028B	WELDMENT, HYD MOTOR MOUNT RH	1
29	068049	MOTOR, HYDRAULIC	1
30	069831	SHAFT, RH SOM HYD. MOTOR	1
31	073513	SPIDER ASSEMBLY, RH	1
32	074068	FASTENER, HHCS 3/8-16 X 1	4
33	074435	CYLINDER, 1.5 X 1.25 STEERING	1
34	076631	CHANNEL, CYLINDER ROD END CONNECTOR	1

Spider Assembly - Left Hand (073512)

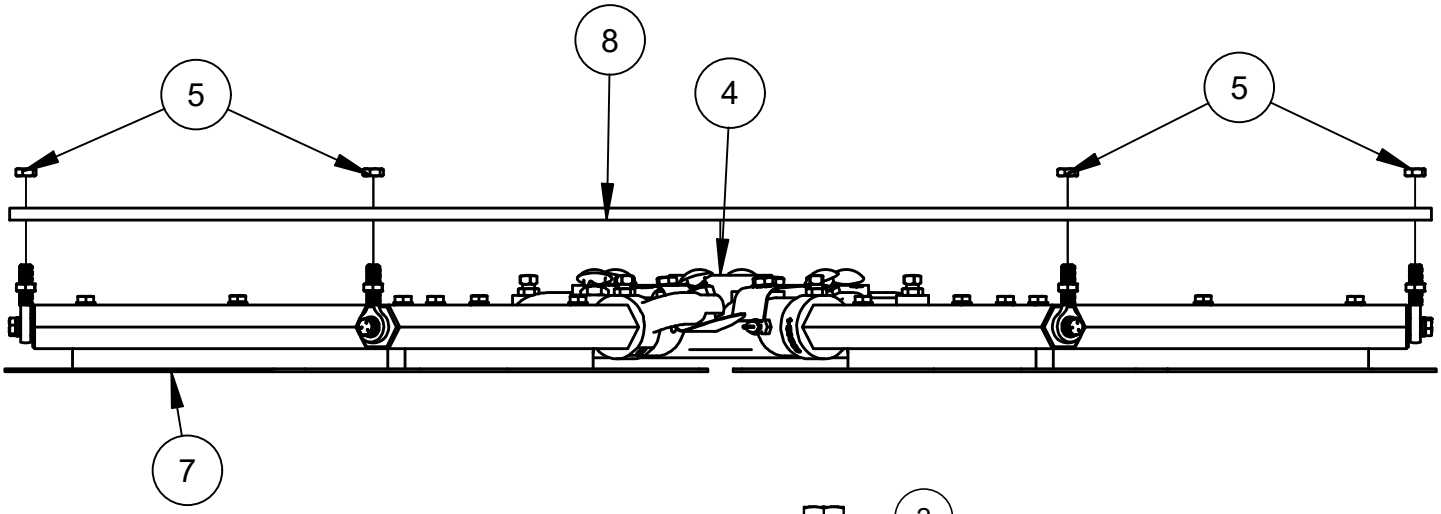

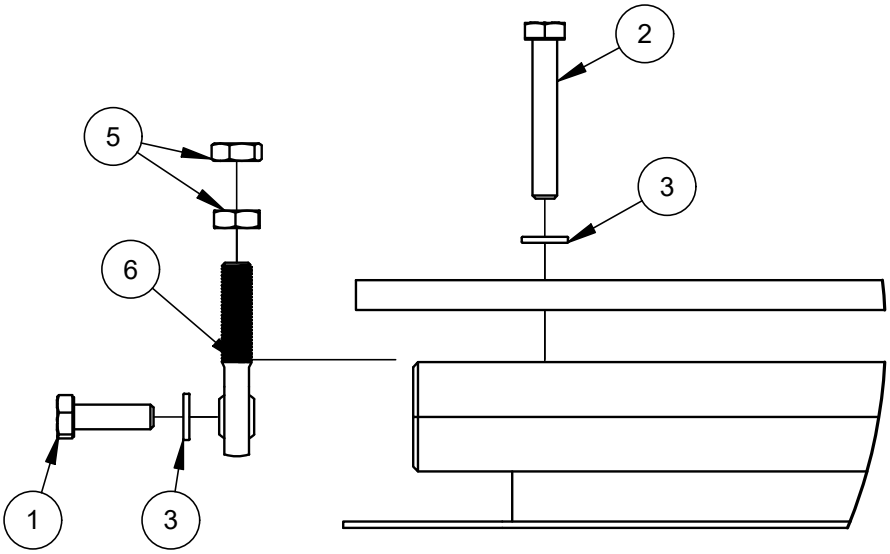

ITEM	PART NO.	DESCRIPTION	QTY
1	010020	FASTENER, HHCS 5/16-18 X 1	6
2	010024	FASTENER, HHCS 5/16-18 X 2	18
3	010090	FASTENER, LW 5/16	24
4	060538	SPIDER ASSEMBLY, LH (SOM) 6 BLADE	1
5	069566	FASTENER, THIN HEX NUT 3/8-24	12
6	069567	BALL JOINT ROD END MALE, WITH OVERSIZED SHANK 5/16” I.D. 3/8-24 THREAD SHANK	6
7	070550	BLADE, FLAT FINISH 8X16 GOLD PRO	6
8	073343	RING, BOTTOM 6 BLADE STABILIZER FOR 46” ROTOR	1

Spider Assembly - Right Hand (073513)

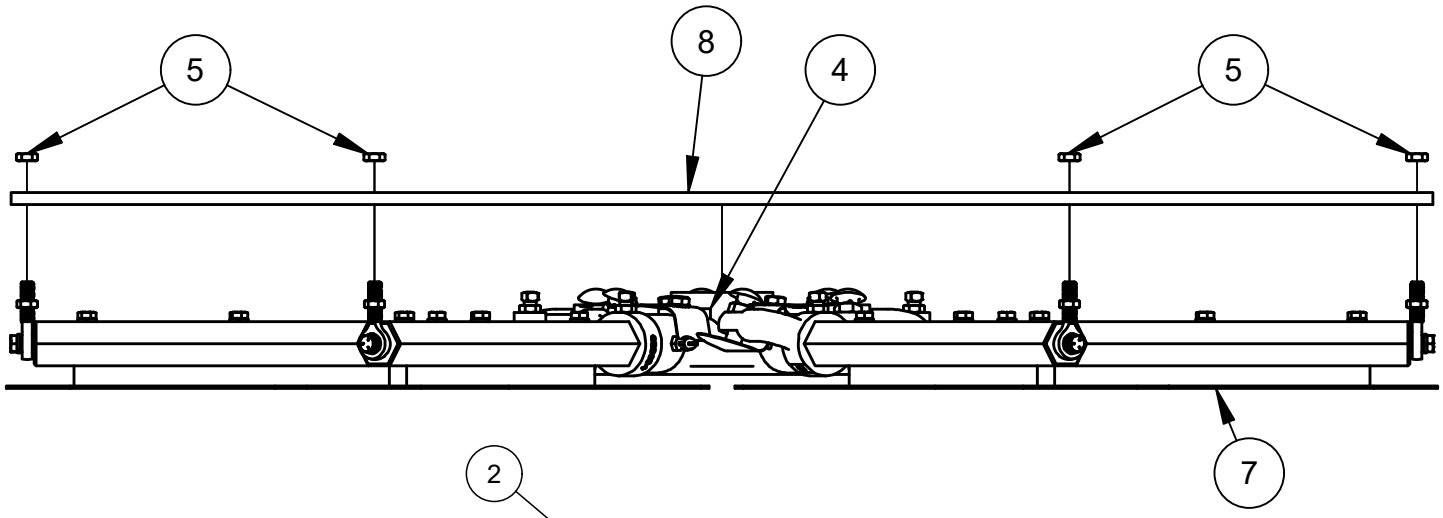

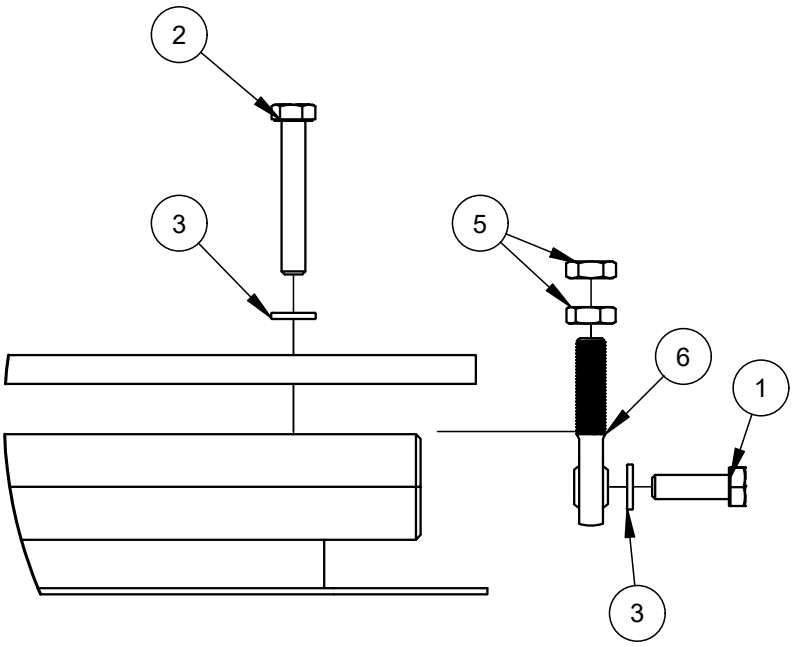

ITEM	PART NO.	DESCRIPTION	QTY
1	010020	FASTENER, HHCS 5/16-18 X 1	6
2	010024	FASTENER, HHCS 5/16-18 X 2	18
3	010090	FASTENER, LW 5/16	24
4	060541	SPIDER ASSEMBLY, RH (SOM) 6 BLADE	1
5	069566	FASTENER, THIN HEX NUT 3/8-24	12
6	069567	BALL JOINT ROD END MALE, WITH OVERSIZED SHANK 5/16” I.D. 3/8-24 THREAD SHANK	6
7	070550	BLADE, FLAT FINISH 8X16 GOLD PRO	6
8	073343	RING, BOTTOM 6 BLADE STABILIZER FOR 46” ROTOR	1

Spider Boss Assembly - Left Hand (060538)

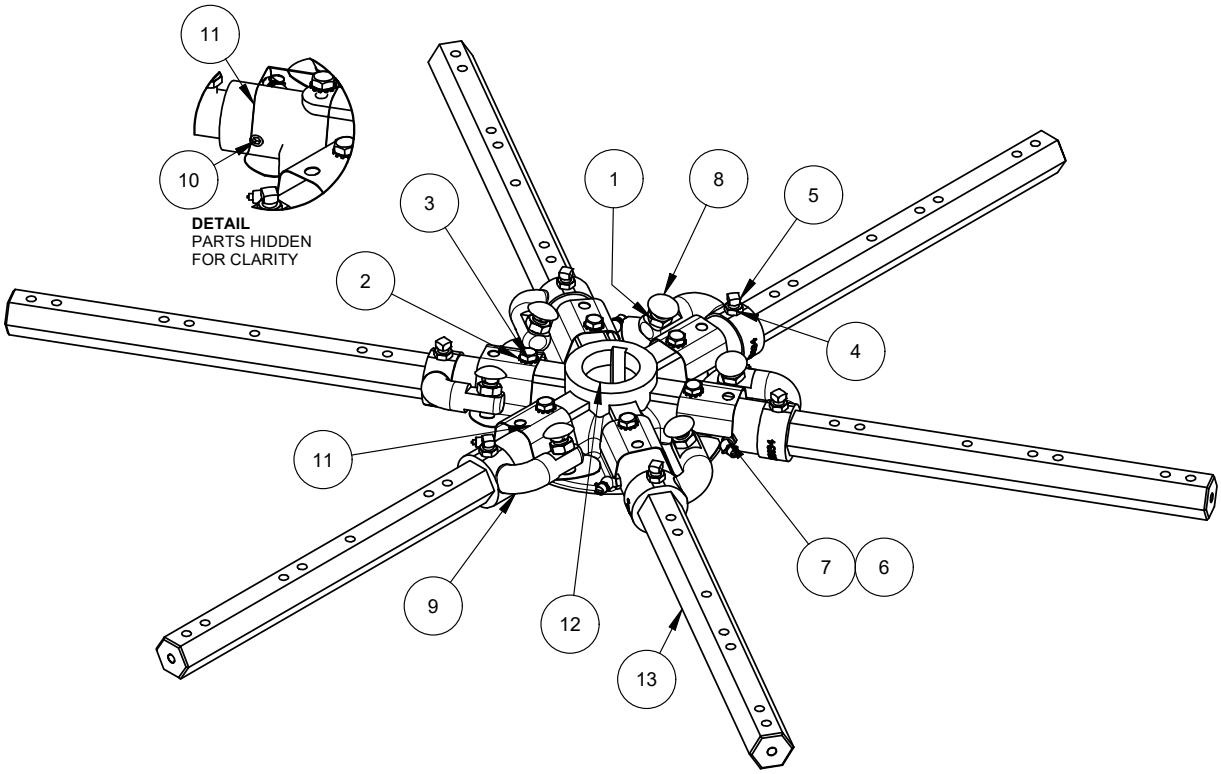

ITEM	PART NO.	DESCRIPTION	QTY
1	010050	FASTENER, NUT HEX JAM 1/2-13	6
2	015682	FASTENER, LW 3/8 EXT TOOTH	6
3	015683	FASTENER, HHCS 3/8-16 X 7/8 DOG POINT	6
4	015684	FASTENER, HEX NUT JAM 3/8-16	6
5	015686	FASTENER, SQHSS 3/8-16 X 1	6
6	015692	CAP, Ø1/4 RED GREASE	6
7	024755	FITTING, 1/8-27 NPT 45° GREASE	6
8	028216	FASTENER, CABLT 1/2-13 X 1-1/2	6
9	033034	LEVER, LIFT SD UNIVERSAL	6
10	050963	PLUG, 1/8 NPT HEX SOCKET ZINC PLATED	6
11	051043	CLIP, SPRING	6
12	064198	SPIDER BOSS, 6 BLADE UNIVERSAL	1
13	069917	ARM, TROWEL FOR 6 BLADE 4FT ROTOR	6

Spider Boss Assembly - Right Hand (060541)

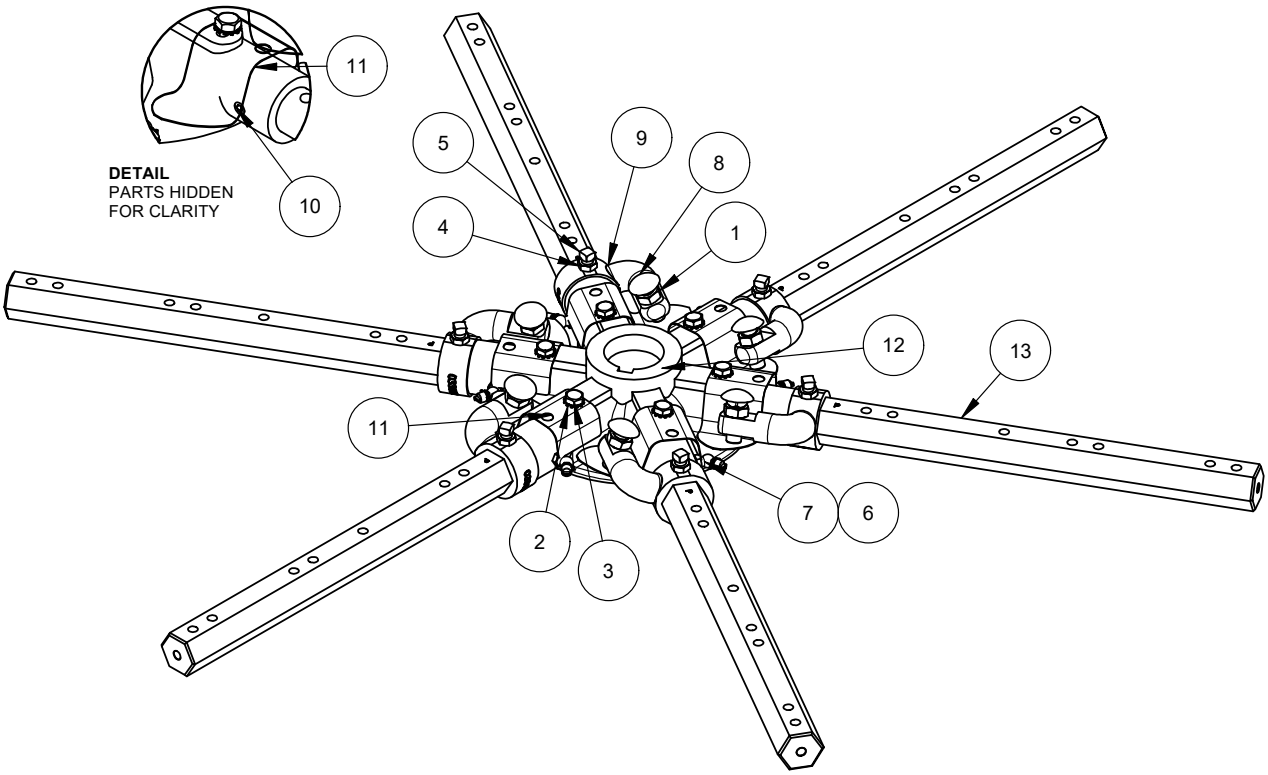

ITEM	PART NO.	DESCRIPTION	QTY
1	010050	FASTENER, NUT HEX JAM 1/2-13	6
2	015682	FASTENER, LW 3/8 EXT TOOTH	6
3	015683	FASTENER, HHCS 3/8-16 X 7/8 DOG POINT	6
4	015684	FASTENER, HEX NUT JAM 3/8-16	6
5	015686	FASTENER, SQHSS 3/8-16 X 1	6
6	015692	CAP, Ø1/4 RED GREASE	6
7	024755	FITTING, 1/8-27 NPT 45° GREASE	6
8	028216	FASTENER, CABLT 1/2-13 X 1-1/2	6
9	033034	LEVER, LIFT SD UNIVERSAL	6
10	050963	PLUG, 1/8 NPT HEX SOCKET ZINC PLATED	6
11	051043	CLIP, SPRING	6
12	064198	SPIDER BOSS, 6 BLADE UNIVERSAL	1
13	069917	ARM, TROWEL FOR 6 BLADE 4FT ROTOR	6

Service Parts, Hydraulic Filters

Note: Images for reference only

Hydraulic Kits

ITEM	PART #	DESCRIPTION	QTY
1	070316	Kit, Hydraulic, Fitting	1
2	070317	Kit, Hydraulic, Hose	1
3	070308	Kit, Hydraulic, Component	1

Replacement Parts

ITEM	PART #	DESCRIPTION	QTY
1	070522	Filter, Steering Element	1
2	043418	Filter, Charge	1
3	070097	Flow Divider / Combiner, Spool	1
4	070098	Check Valve - Ball	1
5	070099	Flow Control Valve, Pressure Compensated	1
6	071150	Refief Valve, Direct	1
7	071151	Solenoid Valve, 3/4”	1
8	071152	Check Valve	1
9	071153	Coil, 12VDC, Deutsch	1
10	071154	Clogging Indicator, 5-BAR	1

Hydraulic Filters Illustration

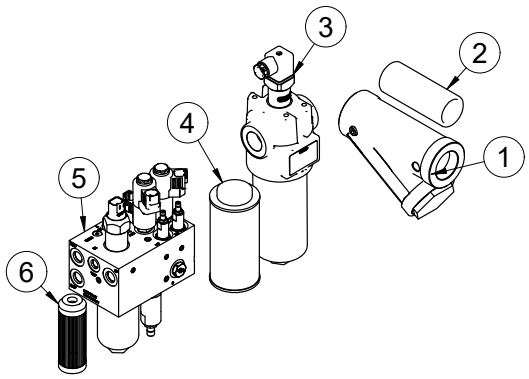

ITEM	PART NO.	DESCRIPTION	QTY
1	046472	Y-STRAINER	1
2	046473	FILTER, REPLACEMENT F/ Y-STRAINER	1
3	065141	HIGH PRESSURE CHARGE FILTER	1
4	043418	FILTER, REPLACEMENT F/ CHARGE FILTER	1
5	069958	MANIFOLD, WITH FILTER STEERING AND PITCH	1
6	070522	FILTER, REPLACEMENT F/ STEERING/PITCH MANIFOLD	1

Service Parts, Engine Filters

Note: Images for reference only

Engine Filters

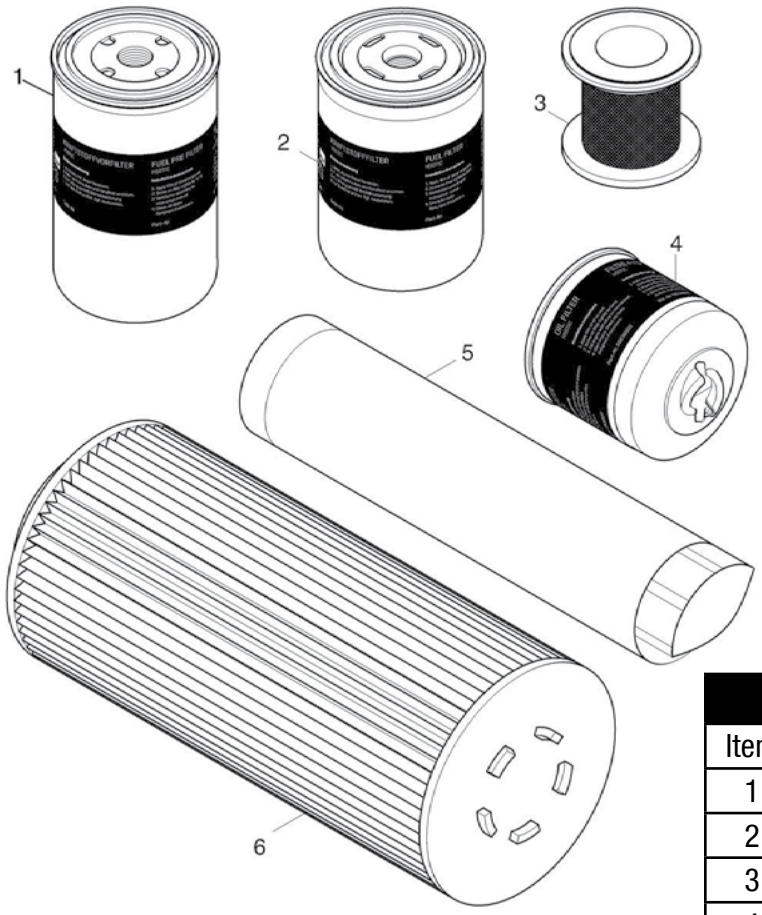

078612

078629

Replacement Filters			
Item	Part #	Description	Qty
1	065851	Pre-Fuel Filter (Old part)	1
2	065852	Fuel Filter (Old part)	1
3	065853	Oil Separator	1
4	065854	Oil Filter	1
5	065855	Air Filter - Secondary	1
6	065856	Air Filter - Primary	1
-	078612	Fuel Filter, Element & O-Rings	1
-	078629	Pre-Fuel Filter, In-line	1

Note: February 2023 Hatz fuel system changed from Pre-Fuel and Main Fuel Filters (OLD) to an In-line Pre-Fuel and Main Fuel filters.

Primary Hydraulic Circuit

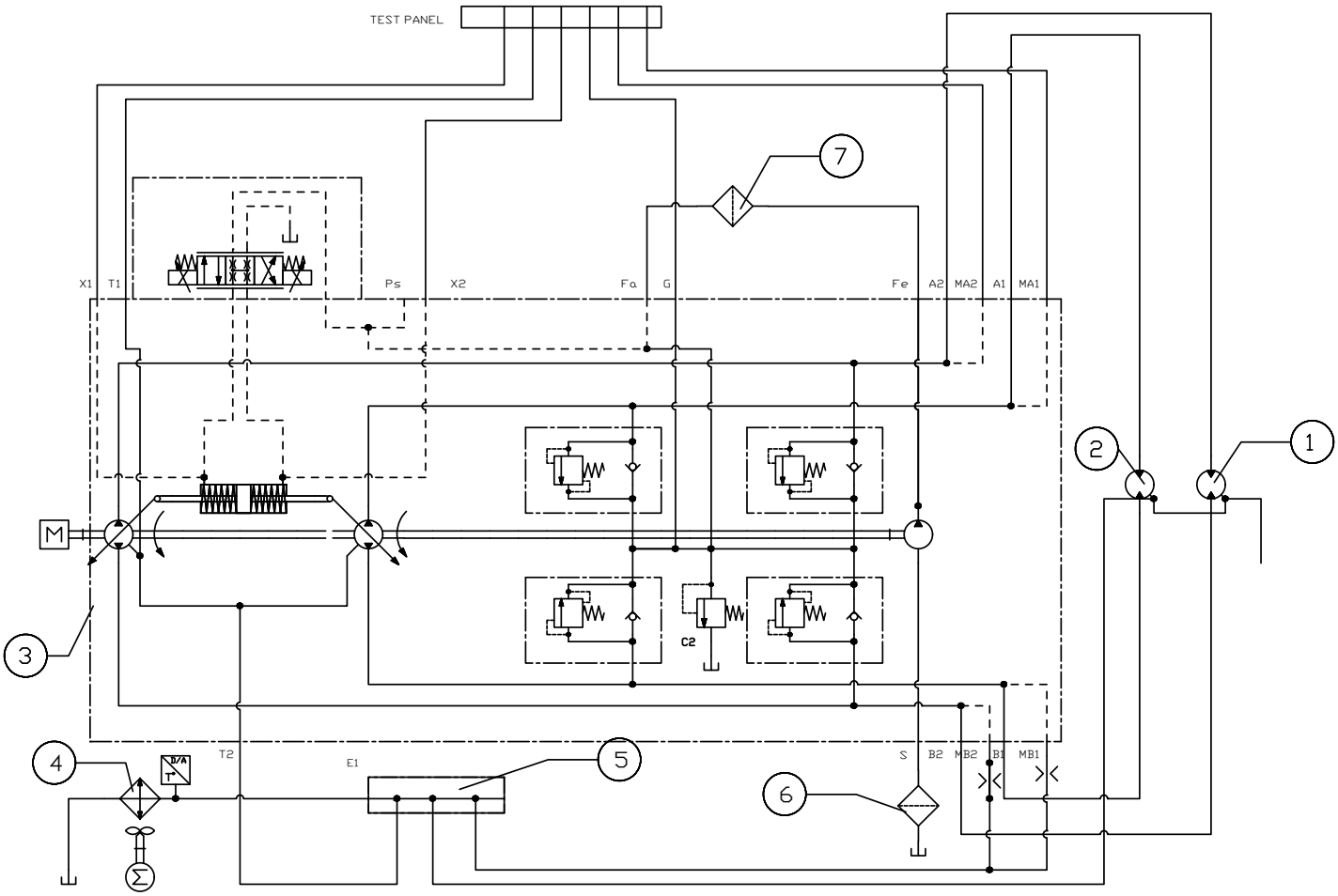

Reference	PART #	DESCRIPTION	QTY
1	068049	Hydraulic Motor	2
2			
3	065138	Primary Pump	1
4	067415	Hydraulic Cooler	1
5	065144	Return Header	1
6	046472	Y-Strainer (046743 Replacement Filter)	1
7	065141	Charge Filter (043418 Filter Element)	1

Auxilary Hydraulic Circuit

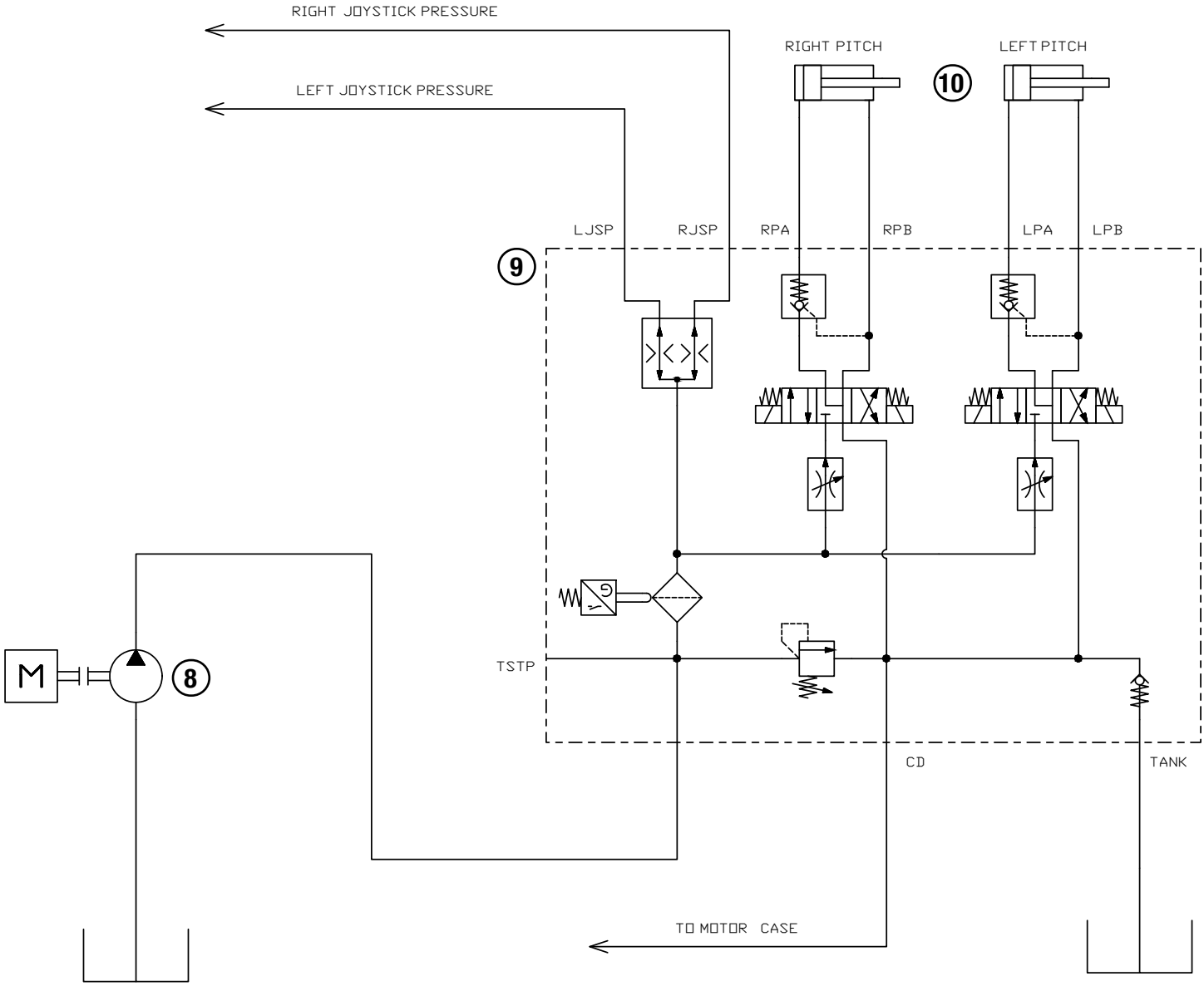

Reference	PART #	DESCRIPTION	QTY
8	065140	Gear Pump	1
9	069958	Manifold, High Pressure Steer/Pitch (070522 Filter Element)	1
10	048659	Cylinder, Pitch	2

Hydraulic Schematic, Steering

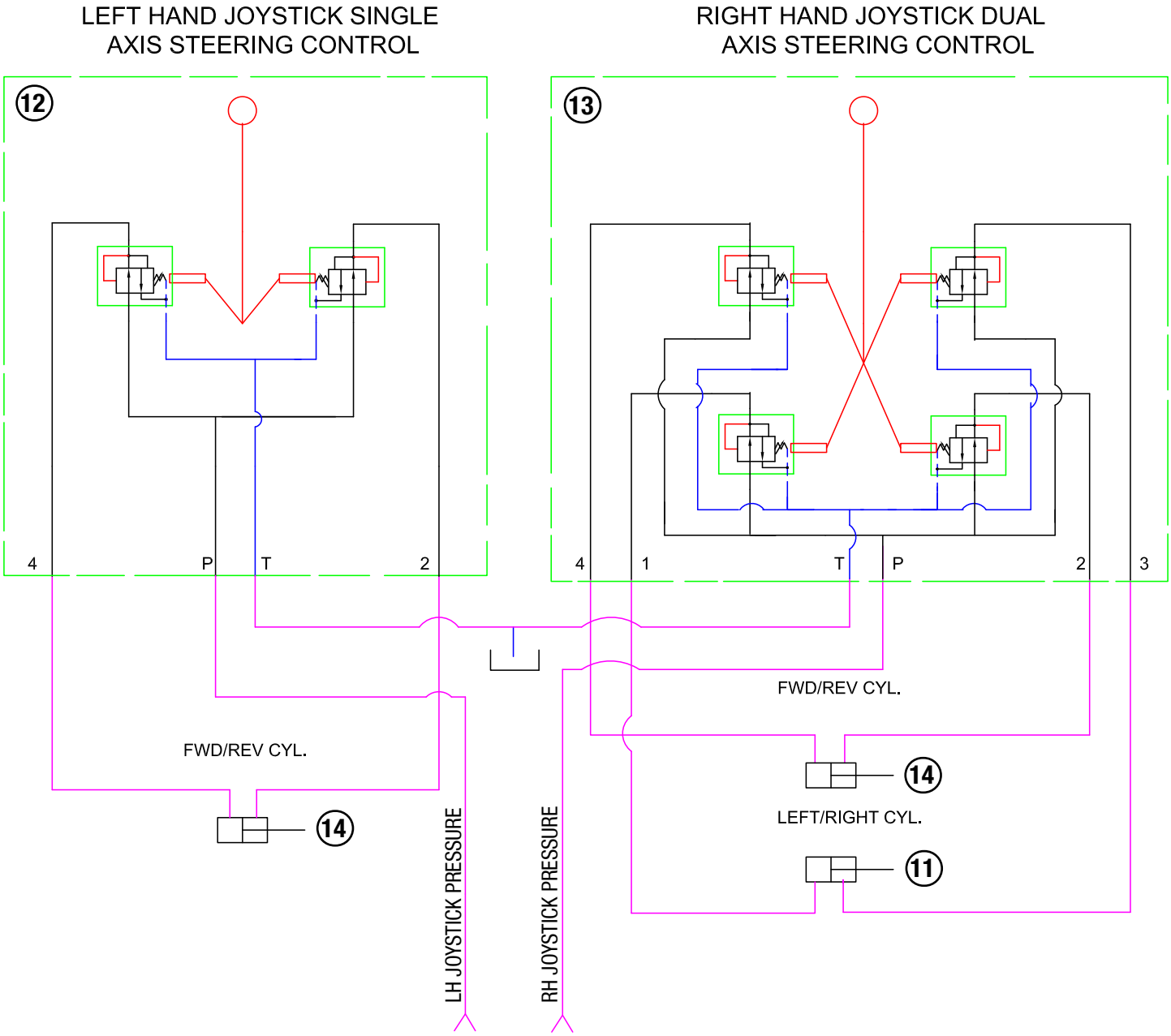

Reference	PART #	DESCRIPTION	QTY
11	048660	Cylinder, Steering L/R	1
12	064510	Joystick, LH	1
13	064511	Joystick, RH	1
14	074435	Cylinder, Steering FW/RV	2

Hydraulic System, Anti-Chatter

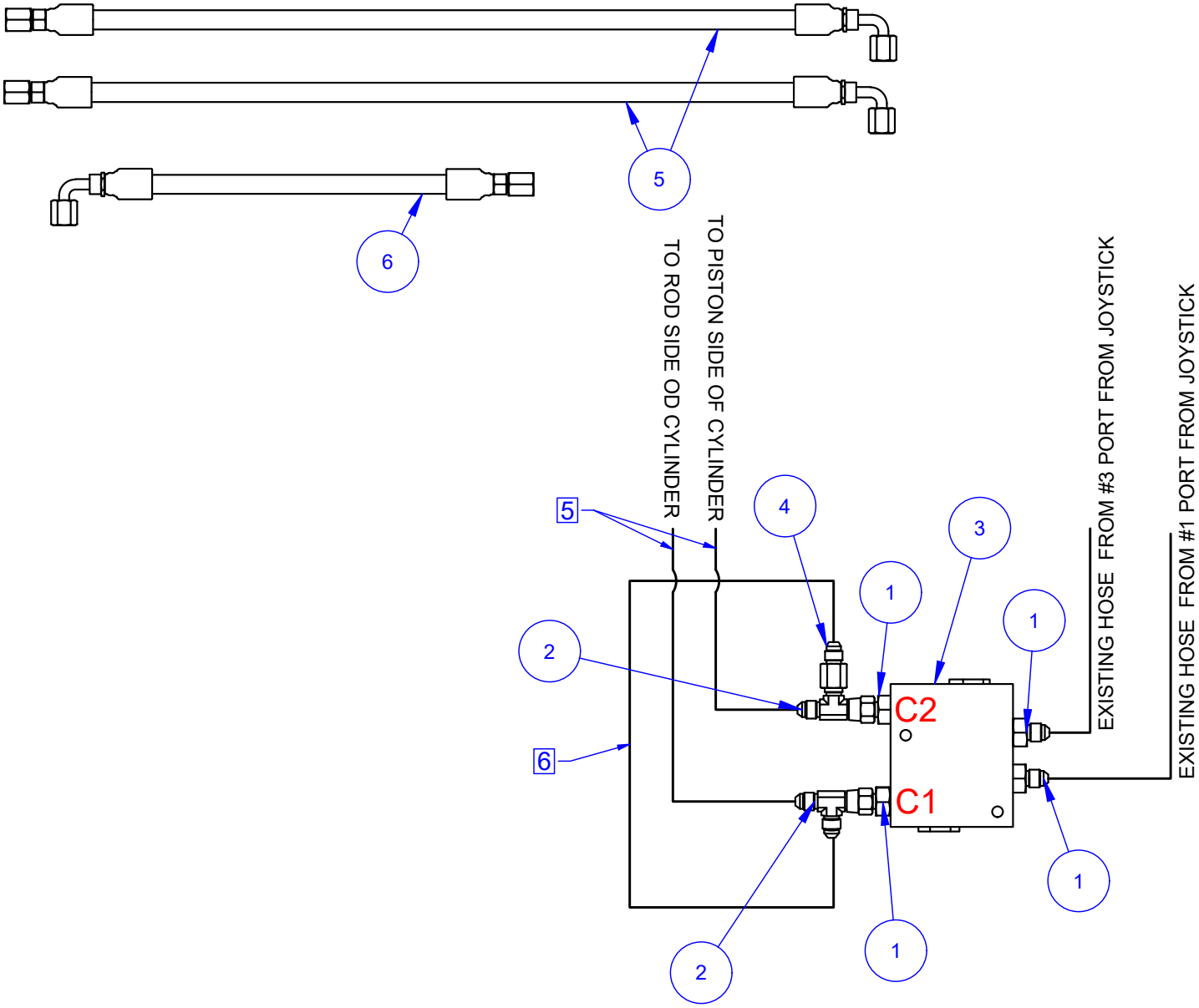

ITEM	PART NO.	DESCRIPTION	QTY
1	045922	FITTING, F6400-4-6-0 STR ML JIC-SAE (7/16-20-9/16-18 THD)	4
2	046361	FITTING, F6602-4-4-4-0 TEE JIC-FEM SAE-JIC (7/16-20 THD)	2
3	049088	VALVE, PO CHECK	1
4	057674	FITTING, ORIFICE .010	1
5	070496	HOSE, ANTI- CHATTER HOSE-1	2
6	070497	HOSE, ANTI- CHATTER HOSE-2	1

SECTION 2: DECALS

Decals - Front (Kit #: 069101)

Part # 070128
Fuse & Relay Detail

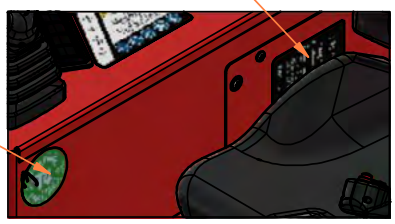

Part # 070658
Teir 4 Compliance

Decals - Rear (Kit #: 069101)

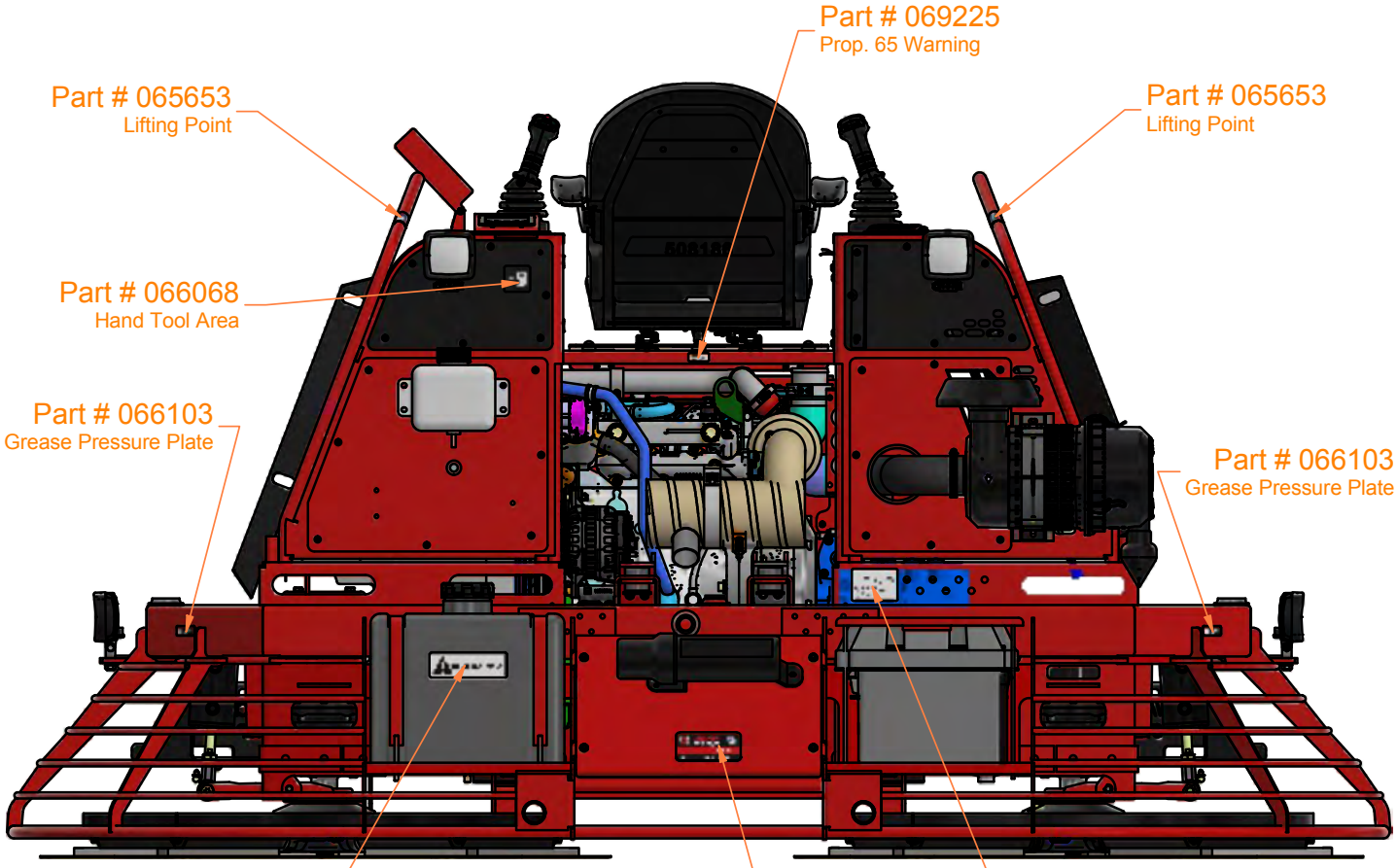

065655 Retardant Decal, Sept. 2024 forward not needed.

Decals - Top (Kit #: 069101)

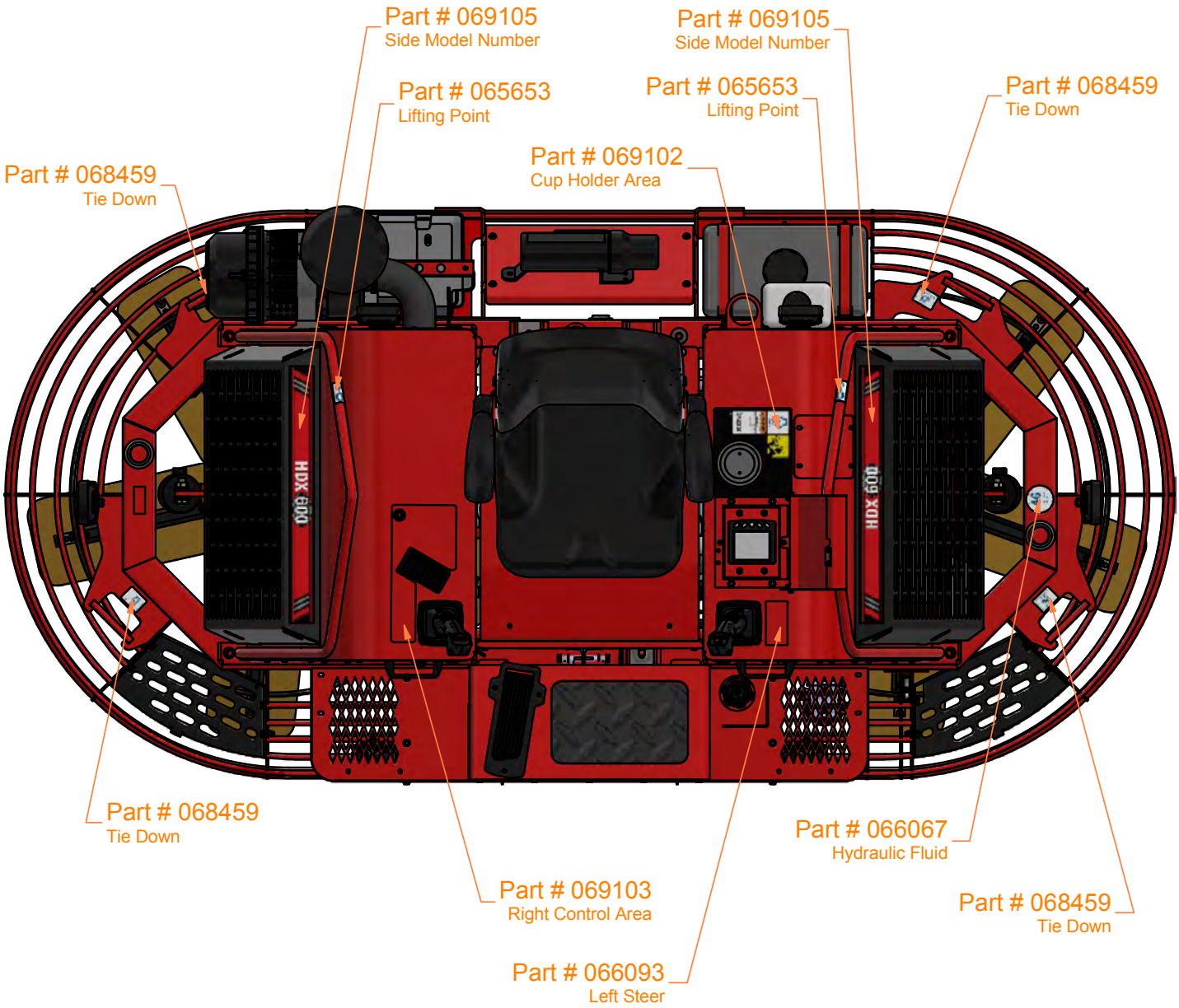

NOTE: PART NUMBER 065965 (SERIAL TAG) IS NOT SHOWN. PLACE ON BOTTOM OF SEAT SO THAT DECAL IS VISIBLE WHEN SEAT IS LIFTED UP.

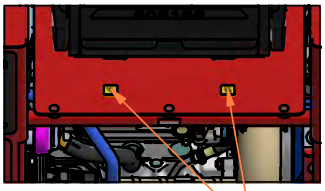

Decals - Right / Left (Kit #: 069101)

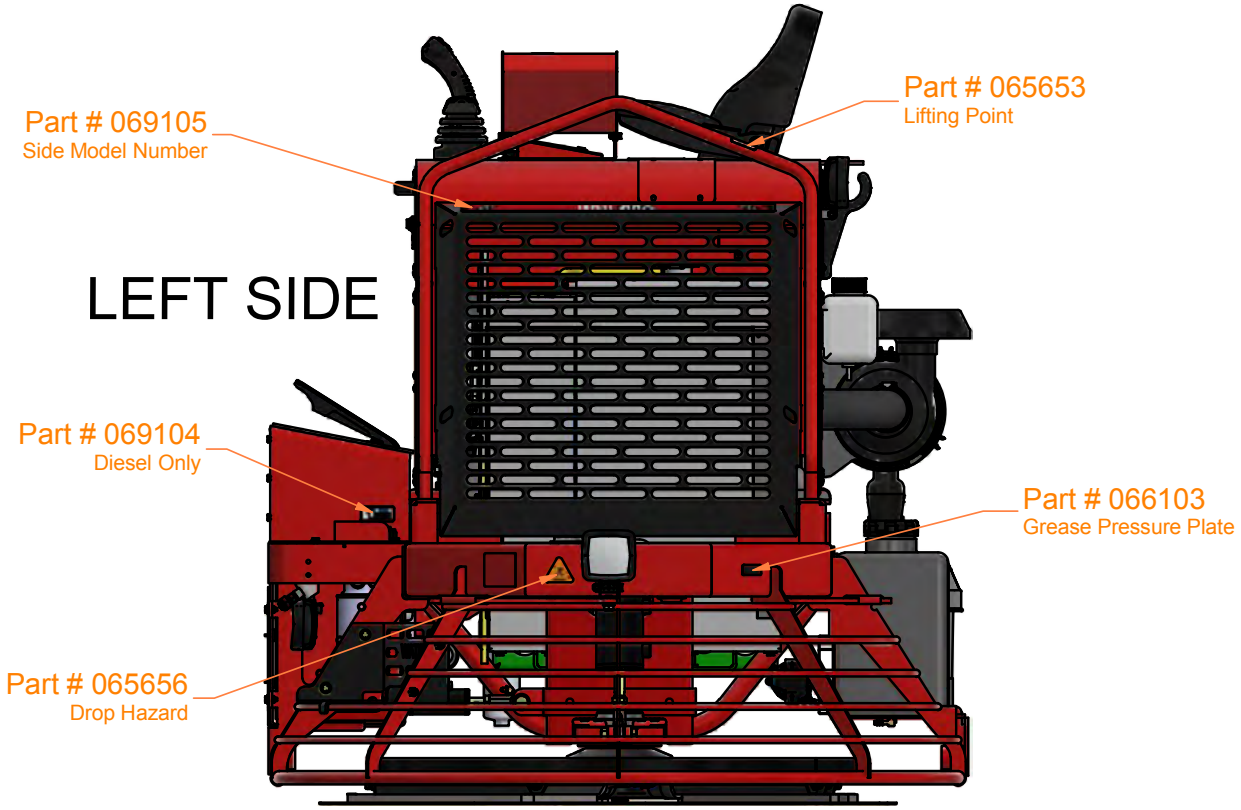

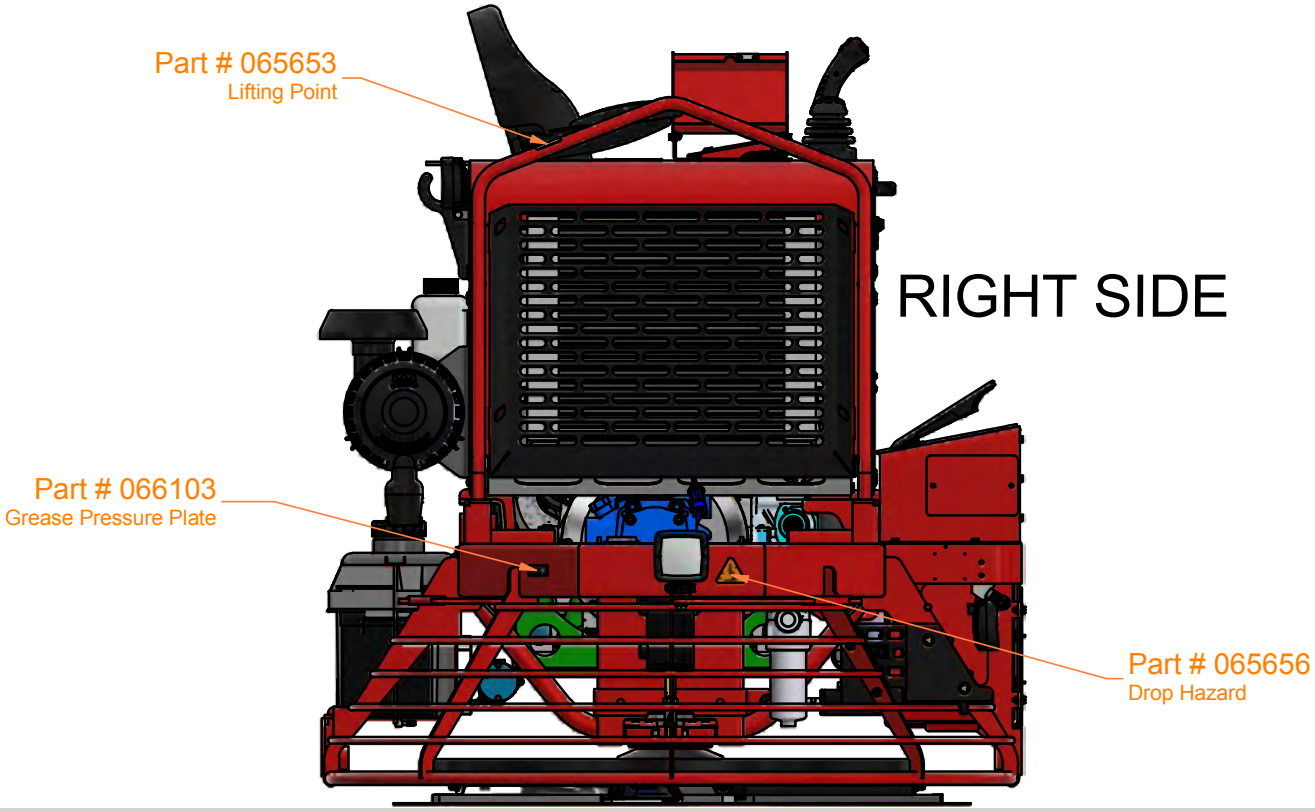

MANUAL REVISION DETAIL			
REVISION #	REVISION DATE	REVISION REFERENCE #	REVISION BY
-	11/20	Initial Release	MW
A	02/21	MN 21-003	MW
B	01/22	Updated Covers	MK
C	06/22	Updated Trowel Arm PN	MK
D	03/24	Telematics & Updates	MK
E	11/24	24-523, 24-554, Added # f/ Telematics Sensors	MK
F	01/30	24-622 - Blade PN Change	MK
G	09/25	Updated illustrations and parts lists	MK
H	10/25	Added Filter Service Parts Pages	MK
I	11/25	Hydraulic Schematic Addition, Steering	MK
J	10/26	Updated 068290 ENG Illustration & Parts List	MK

Copyright © 2020 Allen Engineering Corporation
All rights reserved

All information, specifications, and illustrations in this manual are subject to change without notice and are based on the latest information at the time of publication. No part of this manual may be reproduced or transmitted in any form or by any means, electronics or mechanical, for any purpose, without the express written permission of Allen Engineering Corporation (AEC). AEC assumes no responsibility or liability for any errors or inaccuracies that may appear in this manual.

Allen Products are covered under one or more of the following patent numbers:
10,100,537; 9,068,301; 9,068,300; 8,360,680; 7,690,864; 7,114,876B1; 6,857,815B2; 6,582,153
With other Patents Pending.

Printed in U.S.A.

AEC FACTORY & HEADQUARTERS

819 S. 5TH STREET
PARAGOULD, ARKANSAS 72450
870.236.7751
800.643.0095 (TOLL FREE (USA ONLY)

MAILING

PO BOX 819
PARAGOULD, ARKANSAS 72451

ALLENENG.COM

CONNECT WITH US ON SOCIAL