RIDING TROWEL

HDX600

PARTS & DECALS MANUAL

Manual Part #: 069970P | Revision: E
Language: English | Original Instructions

For information regarding the following, please see the “HDX600 - Safety & Operator Manual”

- Warranty Information
- Dealer Information
- How to identify the Model / Serial Numbers on the machine
- Engine Detail

HDX600 Riding Trowel

PARTS & DECAL MANUAL

This manual covers the products listed below:

Part No.	Description
068360	HDX600 Riding Trowel, HATZ 50HP Diesel T4, 8ft, 5-Boss

Copyright © 2019 Allen Engineering Corporation
All rights reserved

All information, specifications, and illustrations in this manual are subject to change without notice and are based on the latest information at the time of publication. No part of this manual may be reproduced or transmitted in any form or by any means, electronics or mechanical, for any purpose, without the express written permission of Allen Engineering Corporation (AEC). AEC assumes no responsibility or liability for any errors or inaccuracies that may appear in this manual.

Allen Products are covered under one or more of the following patent numbers:
10,100,537; 9,068,301; 9,068,300; 8,360,680; 7,690,864; 7,114,876B1; 6,857,815B2; 6,582,153
With other Patents Pending.

Printed in U.S.A.

Table of Contents

Sect No.	Title	Page
	Table of Contents	**4**
SECTION 1	**PARTS**	**5**
	Factory Service Information	6
	Replacement Part Procedure	7
	General Arrangement	8
	Seat Frame Assembly	10
	Lower Unit Assembly	14
	Engine Assembly (068290)	16
	Hatz Engine, Connector Sets (Replacement Parts)	18
	Bearing Block Assembly (064260)	19
	Rotor Assembly - Left Hand	20
	Rotor Assembly - Right Hand	22
	Spider Assembly - Left Hand	24
	Spider Assembly - Right Hand	25
	Spider Boss Assembly - Left Hand	26
	Spider Boss Assembly - Right Hand	27
	Service Parts, Hydraulic Filters	28
	Service Parts, Engine Filters	29
	Hydraulic Schematic	30
	Hydraulic System	32
	Hydraulic Schematic, Steering	33
	Hydraulic System, Anti-Chatter	34
SECTION 2	**DECALS**	**35**
	Decals - Front (Kit #: 069101)	36
	Decals - Rear (Kit #: 069101)	37
	Decals - Top (Kit #: 069101)	38
	Decals - Right / Left (Kit #: 069101)	39
	Revision Detail	40

SECTION 1: PARTS

SECTION 1 PARTS

Factory Service Information

This section contains the illustrated drawings and parts list for help in identifying and/or ordering replacement parts for your machine. Follow the instructions in the front section of this manual “Ordering Parts” when ordering replacement parts to ensure prompt and accurate delivery.

NOTE

All set screws have blue (LOC-TITE™) applied at the factory. If set screw is removed or loosened for any reason re-apply blue (LOC-TITE™).

NOTE

All grease fittings are capped with CAP PLUG GC-5 (AEC PN 015692) to protect the fitting. If cap becomes missing or damaged replace it as soon as possible.

NOTE

Anti-Seize is applied at the factory to all drive line coupling, gear box main and counter shafts and pitch control threaded rod assemblies. If these parts are disassembled re-apply a light coat of a graphite based anti-seize.

Replacement Part Procedure

ALL REFERENCES MADE TO LEFT/RIGHT SIDES IN THIS MANUAL ARE SITTING ON MACHINE (SOM)
[i.e. Left / Right are in reference from a sitting position on the machine]

We recommend AEC quality replacement parts, available from the AEC Customer Service Department or your nearest AEC Dealer.

Part numbers are subject to change without notice. Part numbers might be different outside of the United States of America. Use part numbers listed in the applicable parts list table when you place your order. If a part number changes, the AEC Customer Service Department or your nearest AEC dealer will have the latest part number for the replacement part.

Remember when you order replacement parts, you will need your **MODEL NUMBER** and **SERIAL NUMBER**. These are the numbers that you have recorded in the UNIT ID section of the "Safety and Operations Manual" or by looking on the unit Identification Plate. Please order replacement parts by the appropriate part number, not the item number.

This manual contains an illustrated parts list for help in ordering replacement parts for your machine. Follow the instructions below when ordering parts to ensure prompt and accurate delivery:

1. All orders for service parts - include the serial number for the machine. Shipment will be delayed if this information is not available.
2. Include correct description and part number
3. Specify exact shipping instructions, including the preferred routing and complete destination address.
4. **DO NOT** return parts to AEC without receiving written authorization from AEC. All authorized returns must be shipped pre-paid.
5. When placing an order, please contact the AEC Dealer nearest you.

NOTE

All information, specifications, and illustrations in this manual are subject to change without notice and are based on the latest information at the time of publication.

General Arrangement

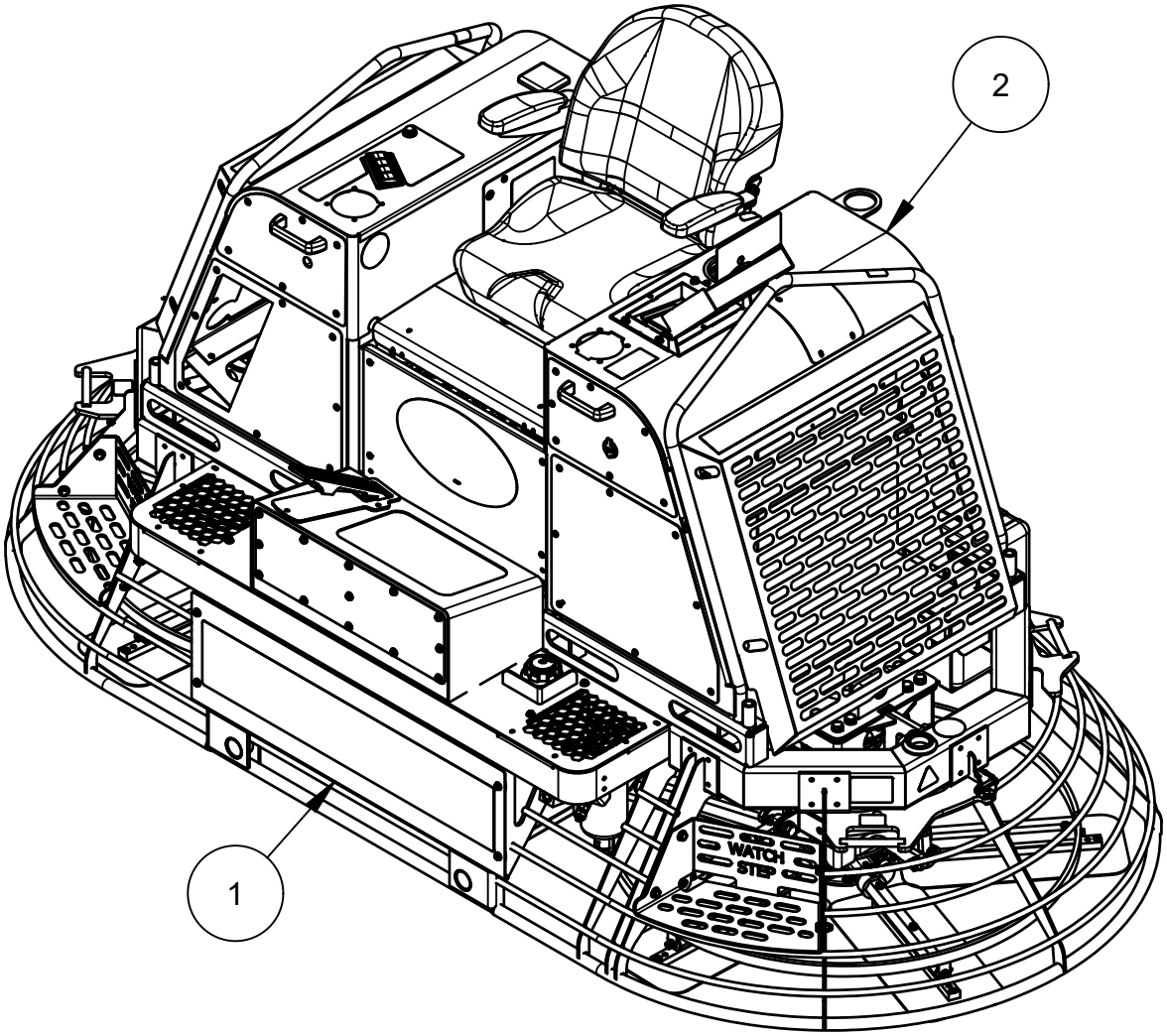

ITEM	PART NO.	DESCRIPTION	QTY
-	068360	Assembly, HDX600 - 5 Boss	-
1	068175	Assembly, Main Frame	1
2	068180	Assembly, Seat Frame	1
-	065168	Harness F/ Lights	1
-	069101	Kit, Decal	1
-	070072	Main Wiring Harness	1
-	070308	Kit, Component	1
-	070316	Kit, Hydraulic Fitting	1
-	070317	Kit, Hydraulic Hose	1

Seat Frame Assembly

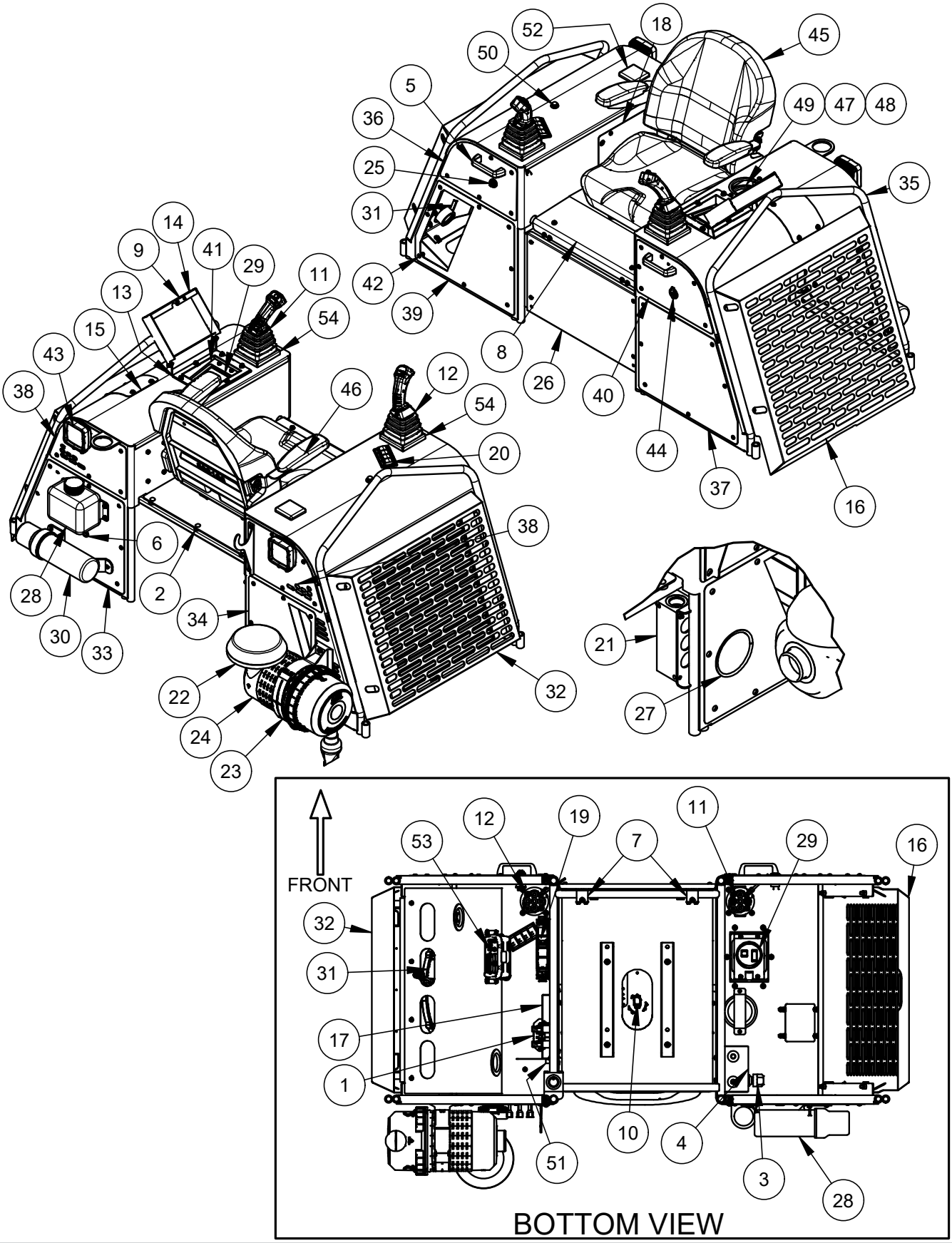

Seat Frame Assembly

ITEM	PART NO.	DESCRIPTION	QTY
-	068180	Assembly, Seat Frame, HDX600	-
1	-	Fuse Block	1
-	034524	Fuse, 20 Amp (Not Shown)	3
-	036554	Fuse, 5 Amp (Not Shown)	6
-	043481	Fuse, 10 Amp (Not Shown)	2
2	047665	Bumper, Rubber	3
3	047886	Cap, Filler Breather	1
4	048595	Tank, Vent	1
5	048678	Handle, Nylon	2
6	056224	Seat Plate	1
7	056920	Latch, Magnetic	1
8	064510	Joystick, Left Hand	1
-	052691	**REPLACEMENT** - Joystick, Left Hand, **Upper Handle ONLY** (Not Shown)	-
9	064511	Joystick, Right Hand	1
-	052690	**REPLACEMENT** - Joystick, Right Hand, **Upper Handle ONLY** (Not Shown)	-
10	064526	Weldment, Cover, Murphy Engine Controller	1
11	064528	Cover, Radiator Access Point	1
12	064760	Guard, End Seat Frame	1
13	065139	Plug, Controller, for Engine	1
14	065143	Kit, Block, 4-Switch	1
15	065188	Bonnet, Air, for Hatz H50 Engine	1
16	065189	Band, for Hatz H50 Air Cleaner	1
17	065190	Breather, for Hatz H50 Air Cleaner (Not Shown)	1
-	065855	Filter, Air, Secondary (Not Shown)	1
-	065856	Filter, Air, Primary (Not Shown)	1
18	065191	Switch, Key, for Hatz H50 Engine	1
19	065489	Cover F/ Front Center	1
20	066028	Reservoir, Coolant Recover	1
21	066227	Controller, Murphy, PV380.2	1
22	066911	Assembly, Oil Cooler and Mounting Bracket	1
23	066913	Cover, Cooler, Right Hand	1
24	068178	Cover F/ Bottom Rear LH	1
25	068181	Cover F/ Bottom Rear RH	1
26	068320	Weldment, Seat Frame	1
27	068366	Cover F/ Top Front RH	1
28	068367	Cover F/ Bottom Front LH	1
29	068368	Cover F/ Rear Top	2

Seat Frame Assembly Continued

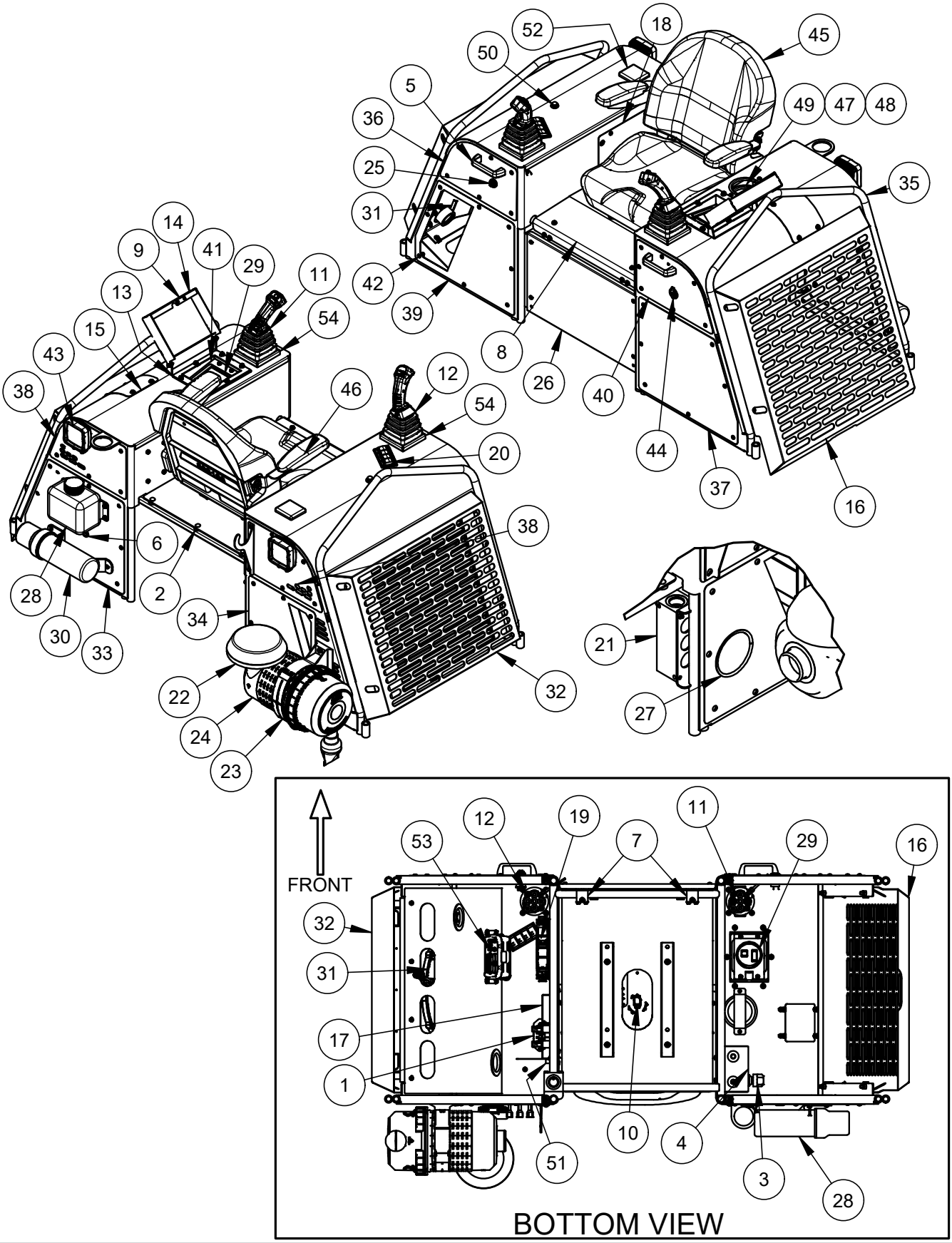

Seat Frame Assembly Continued

ITEM	PART NO.	DESCRIPTION	QTY
30	068369	Cover F/ Bottom Front RH	1
31	068371	Cover F/ Top Front LH	1
32	069737	Fastener, Pan Head Screw 1/4”-20 x 3/4”	71
33	069835	Light, LED, 1200 Lumens, 1.3 Amp, 12 VDC	2
34	069850	Receptacle, USB, 12 VDC	1
35	069874	Seat, Rider	1
-	061374	Switch, Seat, Shut-Off	1
36	069875	Arm Rest, Left / Right Combo, for seat 069874	1
37	074251	Cup Holder	1
-	071122	Cup Holder Trim Material	1.9FT
38	076952	LED, RED	1
39	077525	Buzzer, 12V	1
40	077893	Antenna F/ Telematics	1
41	077894	Controller F/ Telematics	1
42	080279	Riser, For Joystick HDX600	2

Lower Unit Assembly

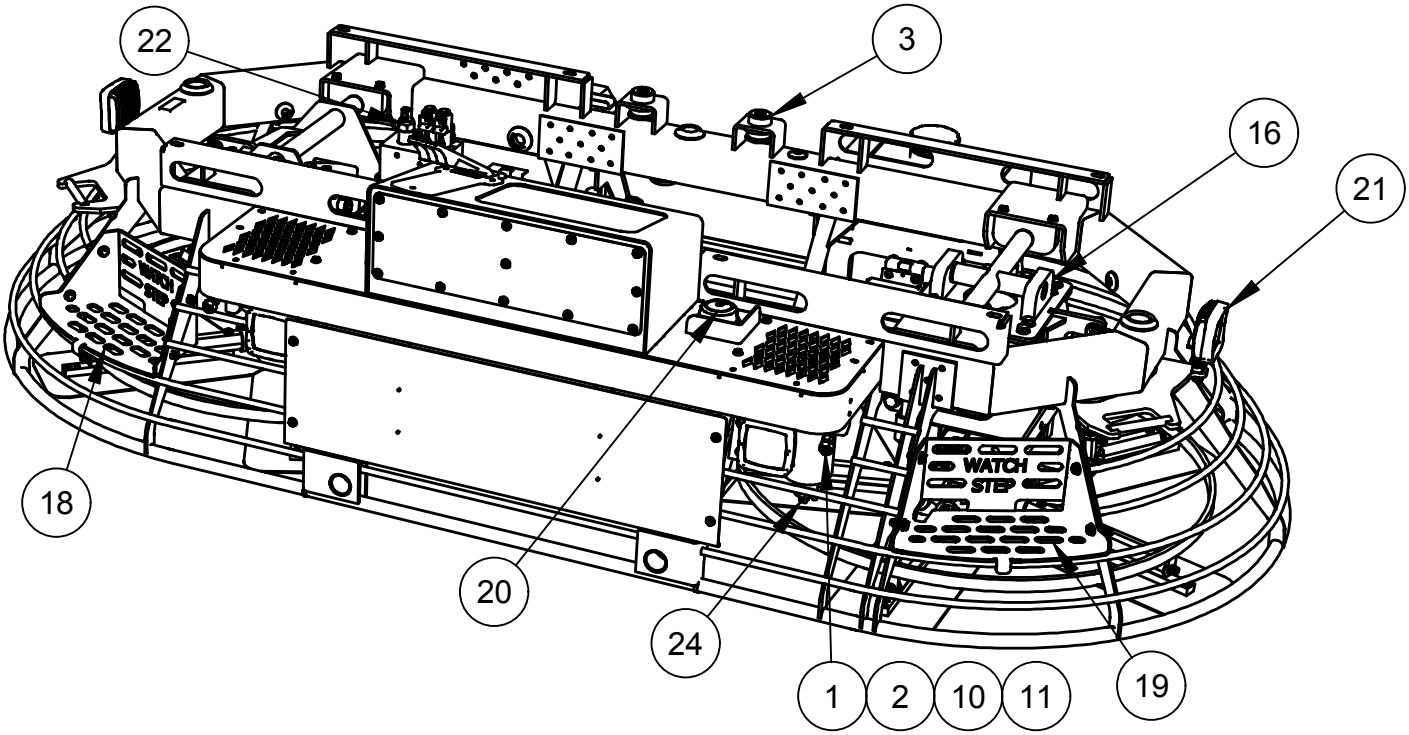

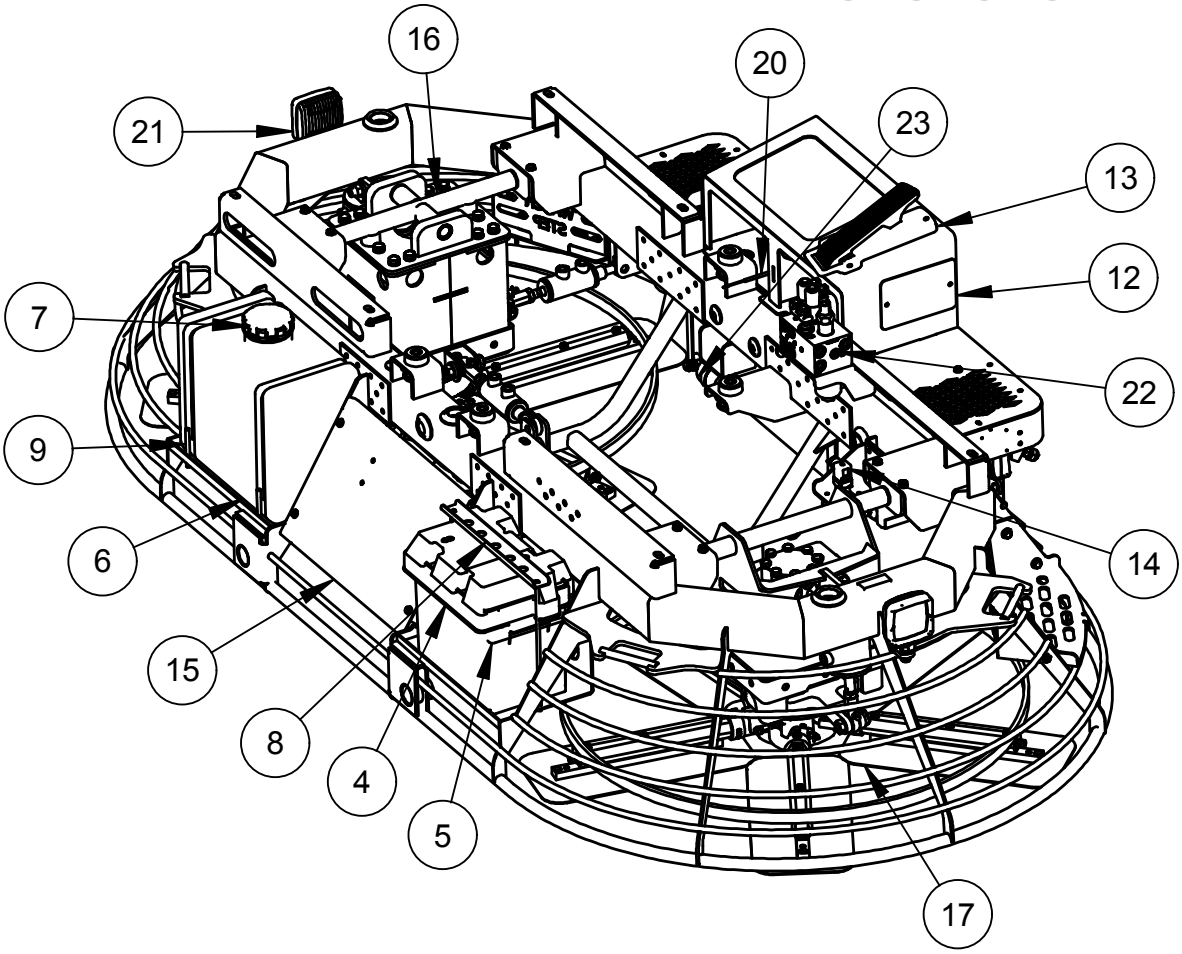

Lower Unit Assembly

ITEM	PART NO.	DESCRIPTION	QTY
-	068175	Assembly, Main Frame, HDX600	-
1	012702	Tip, Brass, 80° x 0.10 GPM	2
2	041624	Retainer, Nylon Spray Tip	2
3	045757	Isolator, Motor Mount	4
4	046696	Box, Battery	1
5	047604	Battery, 700CCA, 12V	1
6	047700	Tank, 6 Gallon, Water, Plastic	1
7	047701	Cap, 3-1/2”, Vented Black	1
8	048563	Channel, Battery Hold-Down	1
9	048921	Strap, Tank	2
10	049957	Nozzle, Straight, Male	2
11	049982	Weldment, Spray Bracket, Left Hand	1
12	060492	Plate, Cover, Top Deck	1
13	063341	Pedal, Foot, Electronic	1
14	065141	Filter, High Pressure	1
15	066152	Panel, Rear Ring	1
16	068036	Assembly, Rotor, Left Hand	1
17	068037	Assembly, Rotor, Right Hand	1
18	068370	Weldment, Step, Right Hand	1
19	068375	Weldment, Step, Left Hand	1
20	069007	Assembly, Fuel Tank	1
21	069835	Light, LED, 1200 Lumens, 12 VDC, 1.3 AMP	4
22	069958	Manifold, Auxiliary	1
23	-	Pump, Fuel	1
24	065852	Filter, Fuel	1
25	065851	Pre-Filter, Fuel	1
26	064514	Bracket, Filter (NOT SHOWN)	1

Engine Assembly (068290)

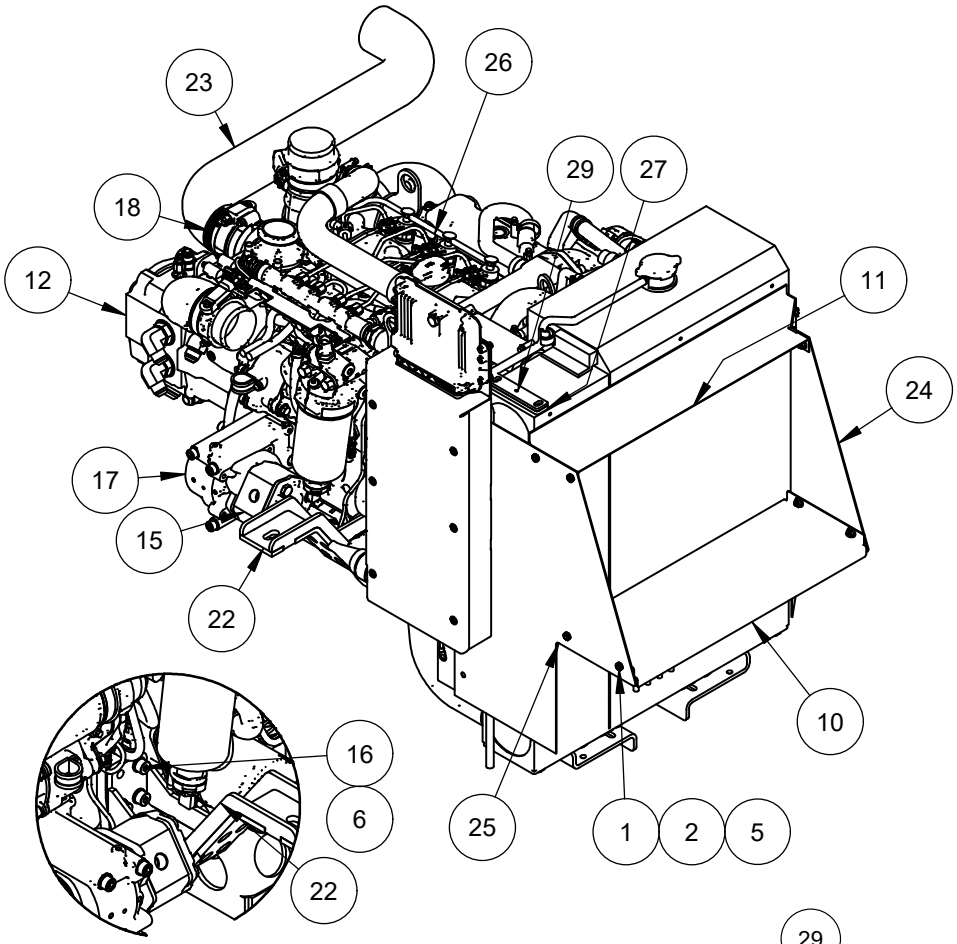

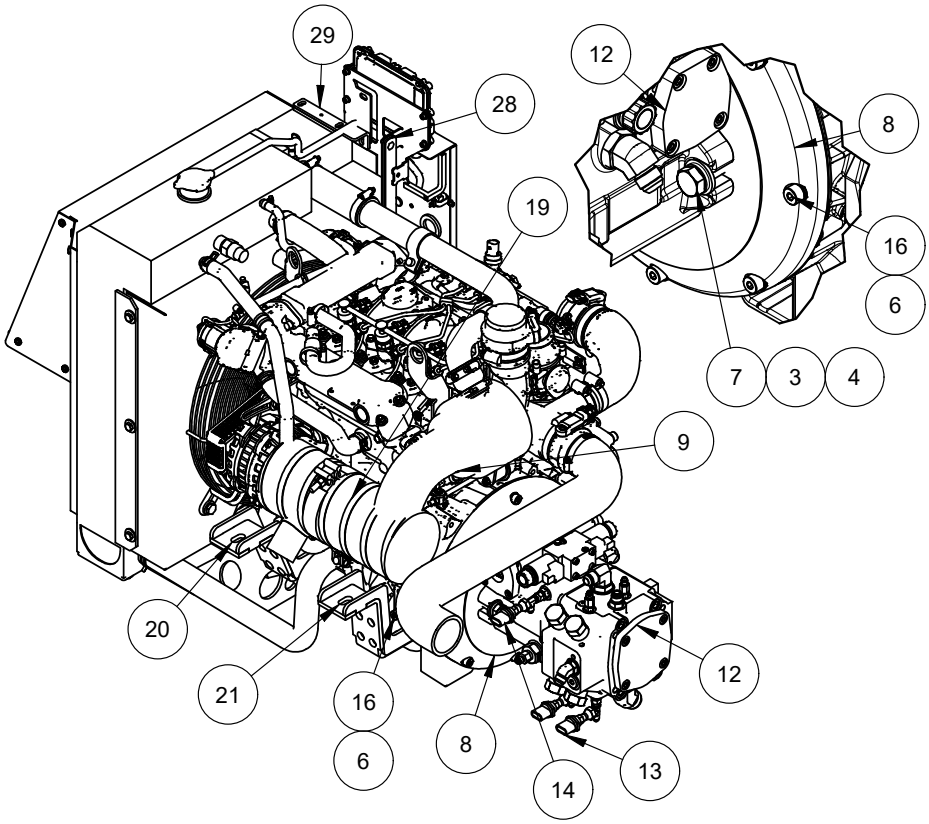

Engine Assembly (068290) Parts List

ITEM	PART NO.	DESCRIPTION	QTY
1	010001	FASTENER, HHCS 1/4-20 X 1/2	9
2	010081	FASTENER, FW 1/4	9
3	010095	FASTENER, LW 5/8	2
4	012982	FASTENER, FW 5/8” ZINC PLATED	2
5	020542	FASTENER, HEX NUT STOVER LOCK 1/4-20	9
6	021072	FASTENER, LW M10	17
7	029311	FASTENER, HHCS 5/8-11 X 1 3/4	2
8	064357	ASSEMBLY, HOUSING AND COUPLING	1
9	064873	TURBO WRAP BLANKET FOR HATZ ENGINE	1
10	065126	COVER, BOTTOM RADIATOR SHROUD	1
11	065127	COVER, TOP RADIATOR SHROUD	1
12	065138	PUMP, HYDRAULIC	1
13	077889	SENSOR, PRESSURE ROTOR MOTOR	2
14	077895	SENSOR, CHARGE PRESSURE	1
15	065140	PUMP, AUXILIARY	1
16	065243	FASTENER, SHCS M10 X 1.5 X 30 MM	17
17	065398	AUXILIARY DRIVE FOR HATZ H50 ENGINE	1
18	065570	HOSE CLAMP, HOSE CLAMP 2-1/8” TO 4”	1
19	066148	DOC WRAP FOR HATZ ENGINE	1
20	068287	ENGINE MOUNT, REAR LH	1
21	068293	ENGINE MOUNT, REAR RH	1
22	068296	ENGINE MOUNT, FRONT LH	1
23	069233	HOSE, FOR AIR INTAKE FOR HATZ ENGINE	1
24	069856	SHROUD, REAR RADIATOR FOR HATZ ENIGNE	1
25	069857	SHROUD, FRONT RADIATOR FOR HATZ ENGINE	1
26	070325	KIT, HATZ ENGINE 3H50TIC	1
27	077323	SPACER, TOP FOR FUSE PANEL RELOCATION HATZ 3 CYL	1
28	080277	PLATE, FUSE PANEL RELOCATION HATZ 3 CYLINDER	1
29	080278	BRACKET, TOP FOR FUSE PANEL RELOCATION HATZ 3 CYL	1
-	065854	OIL FILTER	1
-	078612	FUEL FILTER, ELEMENT AND O-RING	1
-	078629	PRE FUEL FILTER, IN-LINE	1
-	080622	TURBO OIL SUPPLY LINE, BRAIDED FLEX LINE (REPLACEMENT)	1

Hatz Engine, Connector Sets (Replacement Parts)

PART NO.	DESCRIPTION
082457	CONNECTOR SET WFS (DUAL FILTER)
082458	CONNECTOR SET WFS (SINGLE FILTER)
082459	CONNECTOR SET AFDPS
082460	CONNECTOR SET CLS, START
082461	CONNECTOR SET OPS, FLPS1
082462	CONNECTOR SET BPS
082463	CONNECTOR SET INJ, MEU, CRS, DRV
082464	CONNECTOR SET ATS, CTS
082465	CONNECTOR SET RPS
082466	CONNECTOR SET CAS
082467	CONNECTOR SET EGR
082468	CONNECTOR SET TV
082469	CONNECTOR SET PFM
082470	CONNECTOR SET STARTER
082471	CONNECTOR SET DPF T1, T2
082472	CONNECTOR SET STARTER MKS
082473	CONNECTOR SET DPF DIFF
082474	CONNECTOR SET CRS

Bearing Block Assembly (064260)

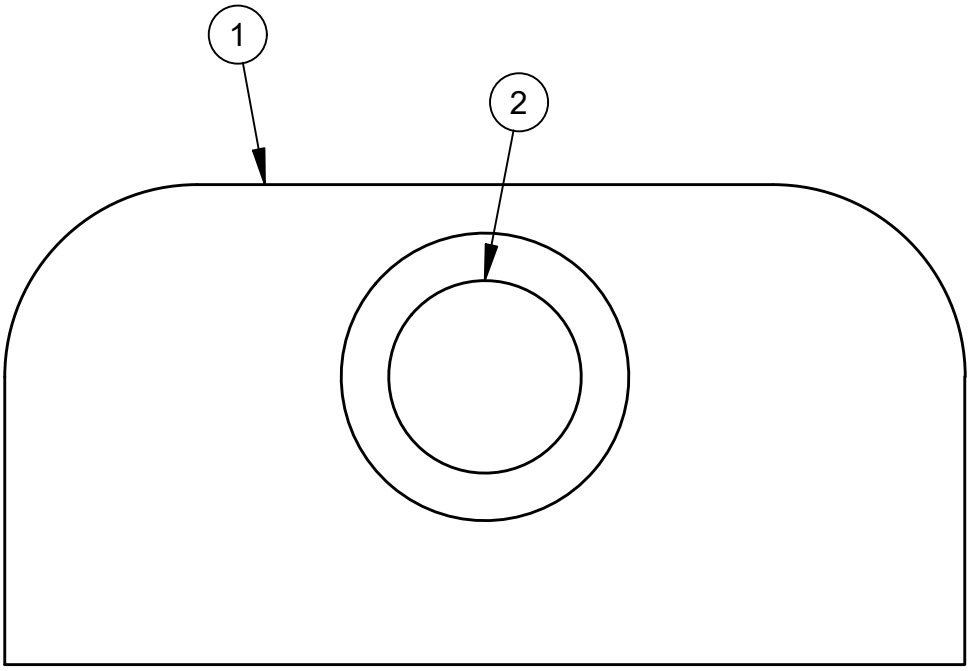

ITEM	PART NO.	DESCRIPTION	QTY
1	064259	BLOCK, FOR BEARING BLOCK	1
2	068157	FLANGED BEARING, 1” ID X 1 LONG OIL IMPREGNATED BRONZE	1

Rotor Assembly - Left Hand

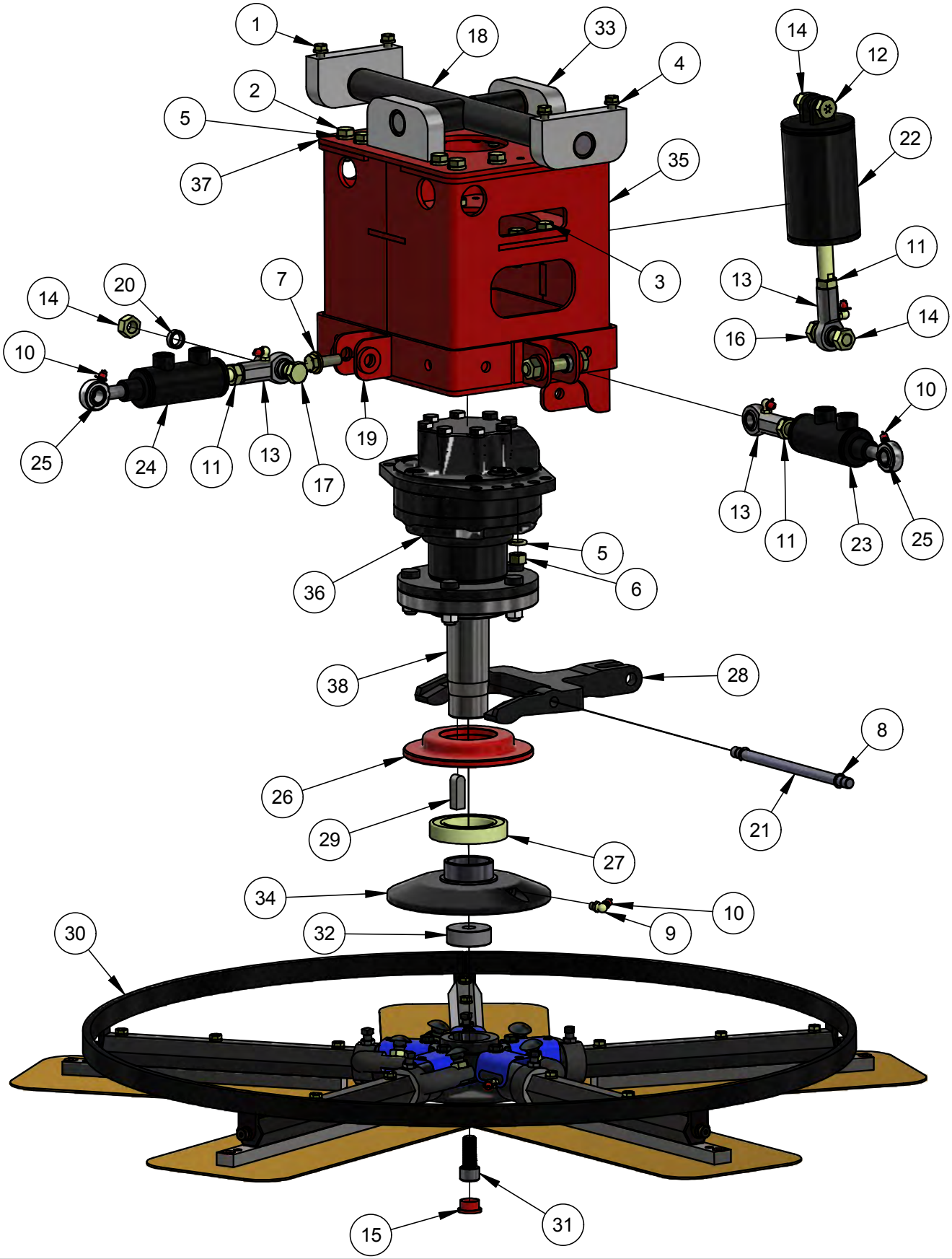

Rotor Assembly - Left Hand

ITEM	PART NO.	DESCRIPTION	QTY
-	068036	Assembly, Rotor, Left Hand, HDX600	-
1	010036	Fastener, HHCS, 3/8”-16 x 1”, Grade 8	8
2	010068	Fastener, HHCS, 1/2”-13 x 1-1/4”, Grade 8	12
3	010069	Fastener, HHCS, 1/2”-13 x 1-1/2”, Grade 8	8
4	010091	Fastener, Washer, Lock, 3/8”, Grade 8	8
5	010093	Fastener, Washer, Lock, 1/2”, Grade 8	18
6	010106	Fastener, Nut, Hex, 1/2”-13, Grade 8	6
7	011490	Fastener, Washer, Flat, 1/2”, Grade 8	2
8	015677	Ring, Retaining, Ø7/16”, E-Style	2
9	015681	Fitting, Grease, 1/2”-27 PTF, 90°	1
10	015692	Cap, Grease, Ø1/4”, Red, Plastic	3
11	020688	Fastener, Nut, Hex, 5/8”-18, Right Hand, Grade 8	3
12	027969	Fastener, HHCS, 5/8”-18 x 2”, Grade 8	1
13	066188	Rod, End, Female, 5/8”	3
14	043269	Fastener, Nut, Stover, 5/8”-18	4
15	046646	Plug, Cap, Threaded, 7/8”	1
16	047354	Fastener, HHCS, 5/8”-18 x 2-1/4”, Grade 8	1
17	048339	Fastener, HHCS, 5/8”-18 x 3”, Grade 8	2
18	048622	Weldment, Crosshead, Left/Right, Front/Rear	1
19	048624	Channel, Cylinder Rod End Connector	2
20	048627	Spacer, Steering Connection	1
21	048628	Pin, Yoke Arm	1
22	048659	Cylinder, Pitch, 3” Bore, 1-1/2” Stroke	1
23	048660	Cylinder, 1-1/2” x 5/8”, Steering	1
24	048661	Cylinder, 1-1/2” x 1-1/4”, Steering	1
25	048747	Rod, End, Male, 1/2”	2
26	049599	Cap, Bearing	1
27	049697	Bearing, Spider Assembly	1
28	049698	Pitch, Yoke Arm	1
29	050700	Key, for Rotor	1
30	060543	Assembly, Lower Rotor, Left Hand	1
31	064252	Fastener, SHCS, 5/8”-11 x 1-1/2”, Right Hand Thread	1
32	064253	Washer, Retaining	1
33	064260	Bearing Assembly w/ Bronze Bearing (068157 Replacement)	4
34	067589	Plate, Pressure	1
35	068031	Weldment, Mount, Left Hand, for Hydraulic Motor	1
36	068049	Motor, Hydraulic Piston	1
37	069549	Plate, Top, for 068031	1
38	069832	Shaft, Rotor, Left Hand	1

Rotor Assembly - Right Hand

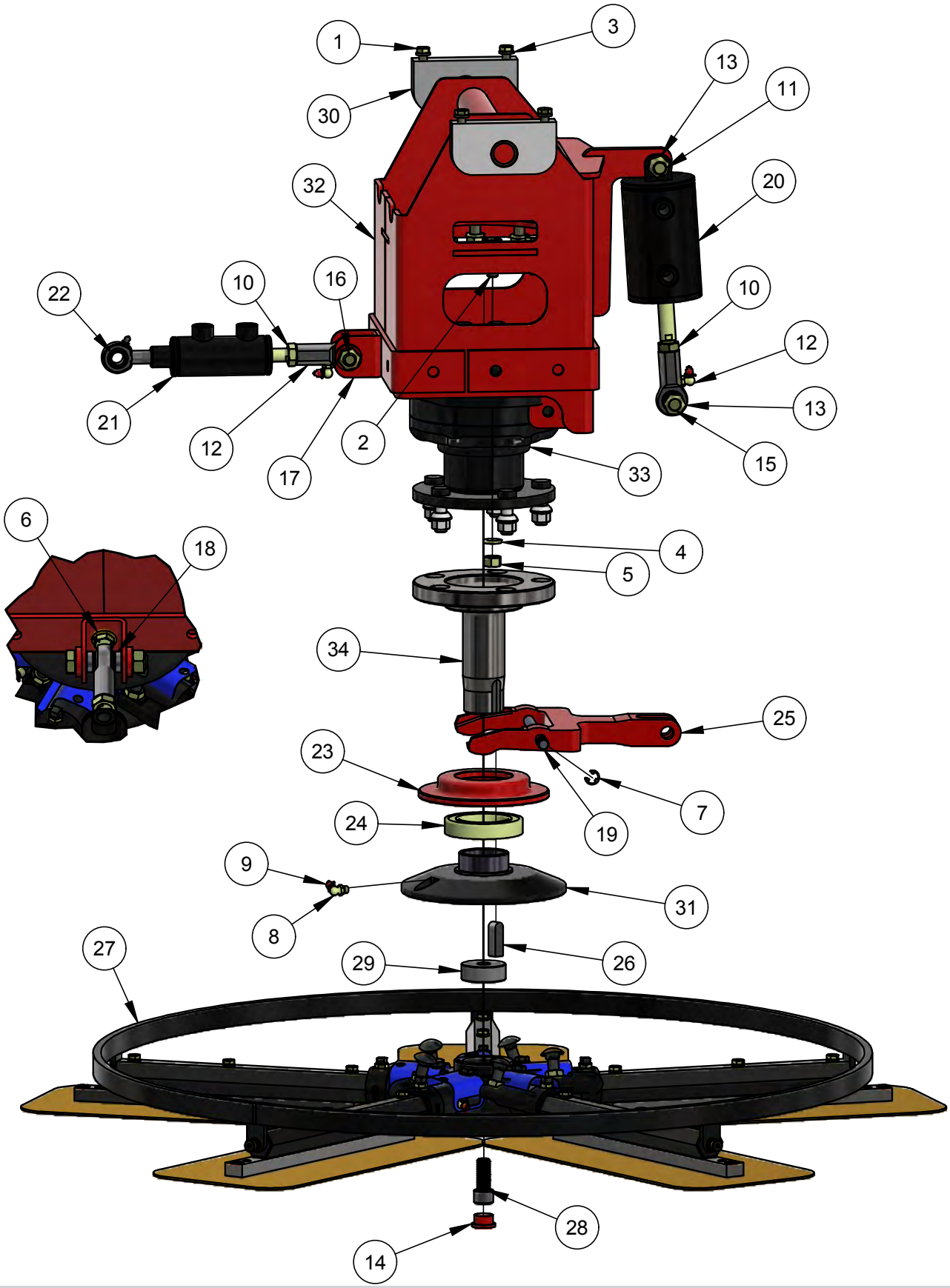

Rotor Assembly - Right Hand

ITEM	PART NO.	DESCRIPTION	QTY
-	068037	Assembly, Rotor, Right Hand, HDX600	-
1	010036	Fastener, HHCS, 3/8”-16 x 1”, Grade 8	4
2	010069	Fastener, HHCS, 1/2”-13 x 1-1/2”, Grade 8	7
3	010091	Fastener, Washer, Lock, 3/8”, Grade 8	4
4	010093	Fastener, Washer, Lock, 1/2”, Grade 8	6
5	010106	Fastener, Nut, Hex, 1/2”-13, Grade 8	6
6	011490	Fastener, Washer, Flat, 1/2”	1
7	015677	Ring, Retaining, Ø7/16”, E-Style	2
8	015681	Fitting, Grease, 1/8”-27 PTF, 90°	1
9	015692	Cap, Grease, Ø1/4”, Plastic, Red	1
10	020688	Fastener, Nut, Hex, 5/8”-18, Grade 8	2
11	027969	Fastener, HHCS, 5/8”-18 x 2”, Grade 8	1
12	066188	Rod, End, Female, 5/8”	2
13	043269	Fastener, Nut, Stover, 5/8”-18	3
14	046646	Plug, Cap, 7/8”, Threaded	1
15	047354	Fastener, HHCS, 5/8”-18 x 2-1/4”, Grade 8	1
16	048339	Fastener, HHCS, 5/8”-18 x 3”, Grade 8	1
17	048624	Channel, Cylinder Rod End Connector	1
18	048627	Spacer, Steering Connection	2
19	048628	Pin, Yoke Arm	1
20	048659	Cylinder, Pitch, 3” Bore, 1-1/2” Stroke	1
21	048661	Cylinder, Steering, 1-1/2” x 1-1/4”	1
22	048747	Rod, End, 1/2”, Male	1
23	049599	Cap, Bearing	1
24	049697	Bearing, Spider Assembly	1
25	049698	Arm, Yoke, Pitch	1
26	050700	Key, Rotor	1
27	060544	Assembly, Lower Rotor, Right Hand	1
28	064251	Fastener, SHCS, 5/8”-11 x 1-1/2”, Left Hand	1
29	064253	Washer, Retaining	1
30	064260	Bearing Assembly w/ Bronze Bearing (068157 Replacement)	2
31	067589	Plate, Pressure	1
32	068028	Mount, Hydraulic Motor, Right Hand	1
33	068049	Motor, Hydraulic Piston	1
34	069831	Shaft, for Hydraulic Motor, Right Hand	1

Spider Assembly - Left Hand

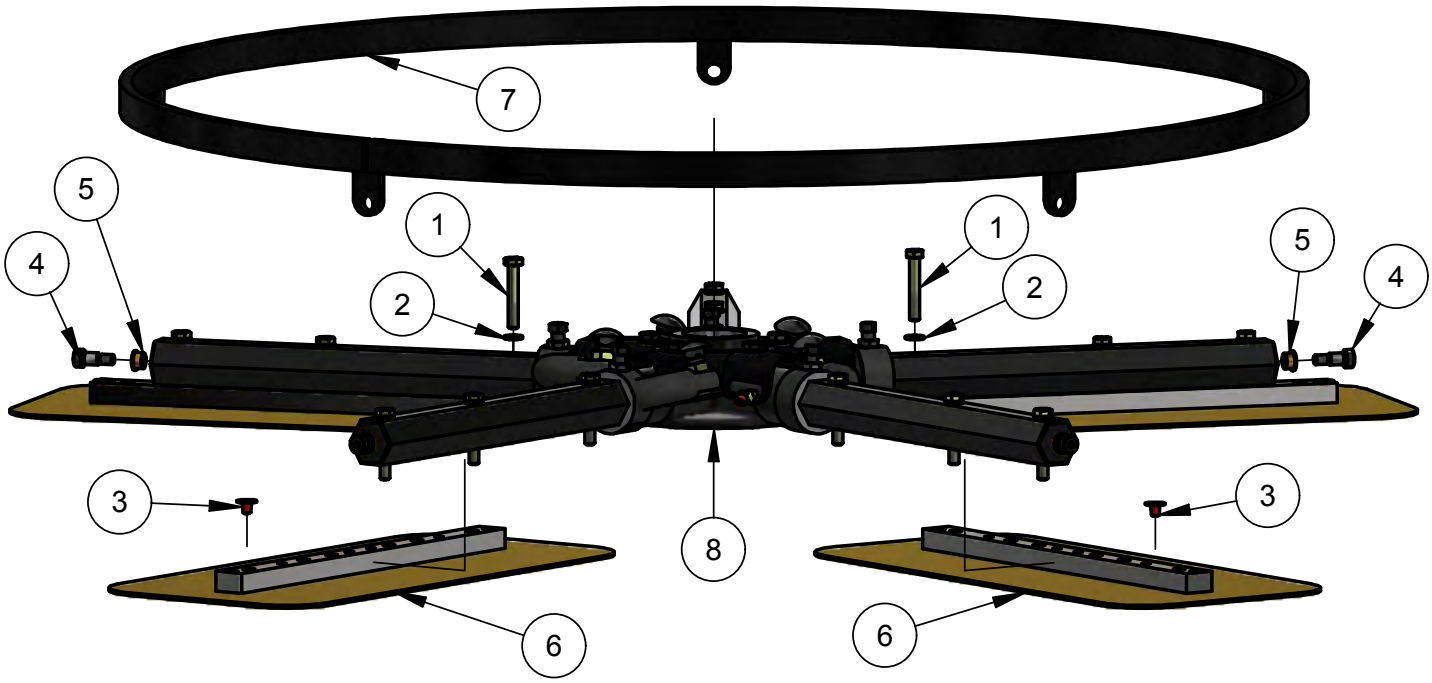

ITEM	PART #	DESCRIPTION	QTY
-	060543	Assembly, Lower Rotor, Left Hand	-
1	010024	Fastener, Bolt, HHCS, 5/16”-18 x 2”, Grade 8	15
2	010090	Fastener, Washer, Lock, 5/16”, Grade 8	15
3	015694	Cap, Grease, W-1, Red, Plastic, Tapered	5
4	025091	Fastener, Bolt, Shoulder, 3/8” x 1/2”	5
5	025092	Bushing, Bronze, 3/8” x 1/2” x 5/16”	5
6	028778V	Blade, Flat Finish, 8” x 17”, Gold	5
7	040833	Ring, Stabilizer, 1200VG, Standard, 5-Blade	1
8	067587	Assembly, Spider, Left Hand, 5-Blade	1

Spider Assembly - Right Hand

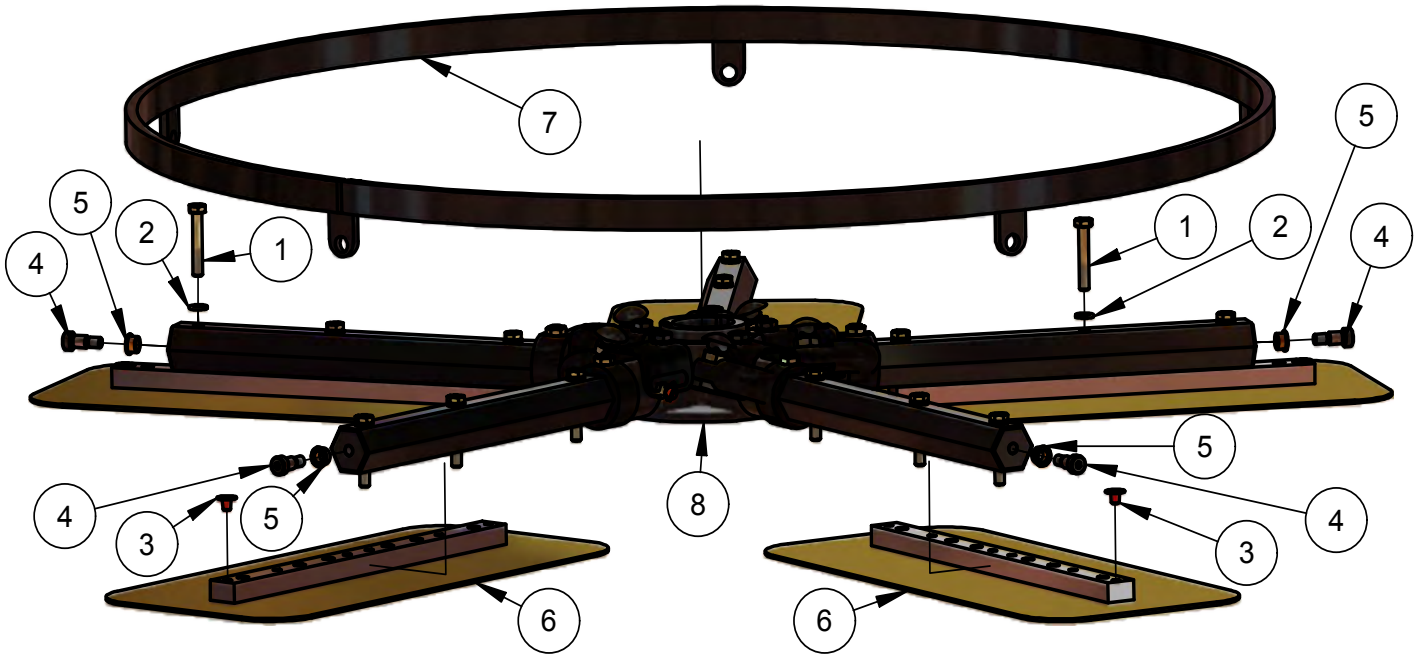

ITEM	PART #	DESCRIPTION	QTY
-	060544	Assembly, Lower Rotor, Right Hand	-
1	010024	Fastener, Bolt, HHCS, 5/16”-18 x 2”, Grade 8	15
2	010090	Fastener, Washer, Lock, 5/16”, Grade 8	15
3	015694	Cap, Grease, W-1, Red, Plastic, Tapered	5
4	025091	Fastener, Bolt, Shoulder, 3/8” x 1/2”	5
5	025092	Bushing, Bronze, 3/8” x 1/2” x 5/16”	5
6	028778V	Blade, Flat Finish, 8” x 17”, Gold	5
7	040833	Ring, Stabilizer, 1200VG, Standard, 5-Blade	1
8	067588	Assembly, Spider, Right Hand, 5-Blade	1

Spider Boss Assembly - Left Hand

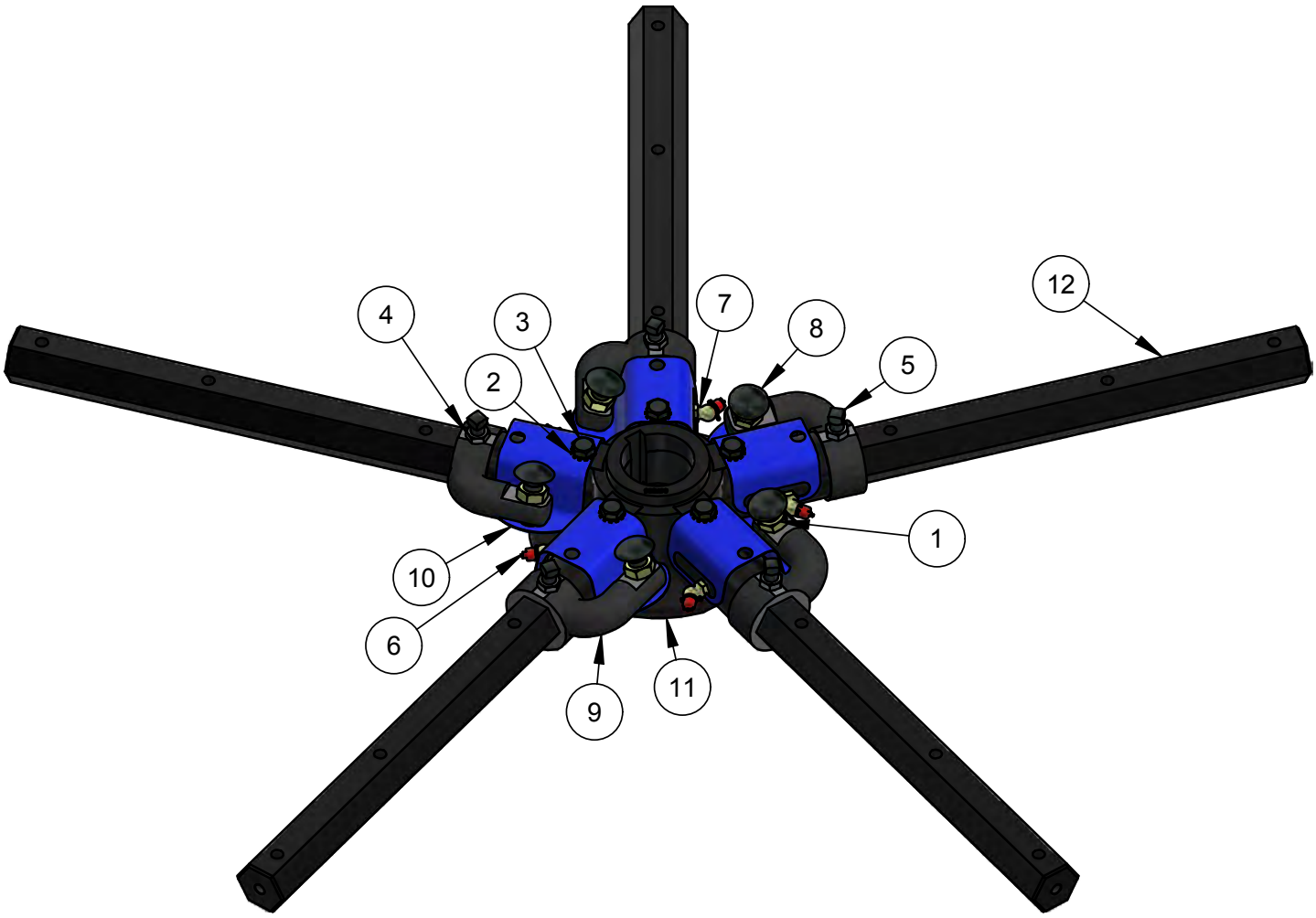

ITEM	PART #	DESCRIPTION	QTY
-	067587	Assembly, Spider, Left Hand	-
1	010050	Fastener, Nut, Hex, 1/2”-13	5
2	015682	Fastener, External Tooth, 3/8”	5
3	015683	Fastener, Bolt, Hex Head, 3/8”-16 x 7/8”	5
4	015684	Fastener, Nut, Hex, 3/8”-16	5
5	015686	Fastener, Bolt, SQHSS, 3/8”-16 x 1”	5
6	015692	Cap, Grease, 1/4”, Plastic, Red	5
7	024755	Fitting, Grease, 1/8”-27 NPT, 45°	5
8	028216	Fastener, Bolt, 1/2”-13 x 1-1/2”, Grade 8	5
9	033034	Lever, Lift, Universal	5
10	040792	Clip, Spider Spring, 46-48	5
11	067586	Boss, Spider, Machined	1
12	040700	Arm, Trowel, 46”, for 5 Point Spider	5

Spider Boss Assembly - Right Hand

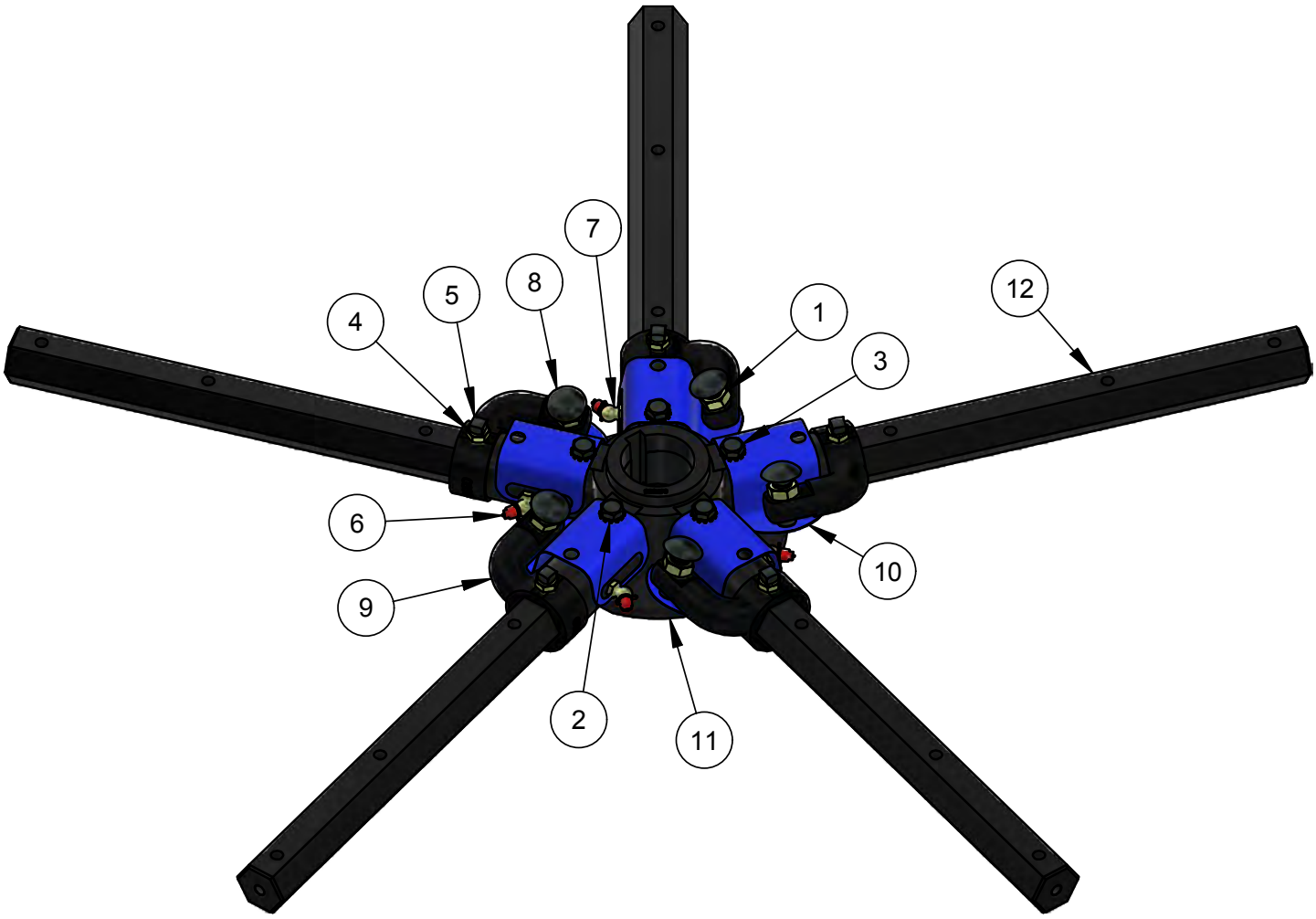

ITEM	PART #	DESCRIPTION	QTY
-	067588	Assembly, Spider, Right Hand	-
1	010050	Fastener, Nut, Hex, 1/2”-13	5
2	015682	Fastener, External Tooth, 3/8”	5
3	015683	Fastener, Bolt, Hex Head, 3/8”-16 x 7/8”	5
4	015684	Fastener, Nut, Hex, 3/8”-16	5
5	015686	Fastener, Bolt, SQHSS, 3/8”-16 x 1”	5
6	015692	Cap, Grease, 1/4”, Plastic, Red	5
7	024755	Fitting, Grease, 1/8”-27 NPT, 45°	5
8	028216	Fastener, Bolt, 1/2”-13 x 1-1/2”, Grade 8	5
9	033034	Lever, Lift, Universal	5
10	040792	Clip, Spider Spring, 46-48	5
11	067586	Boss, Spider, Machined	1
12	040700	Arm, Trowel, 46”, for 5 Point Spider	5

Service Parts, Hydraulic Filters

Note: Images for reference only

Hydraulic Filters

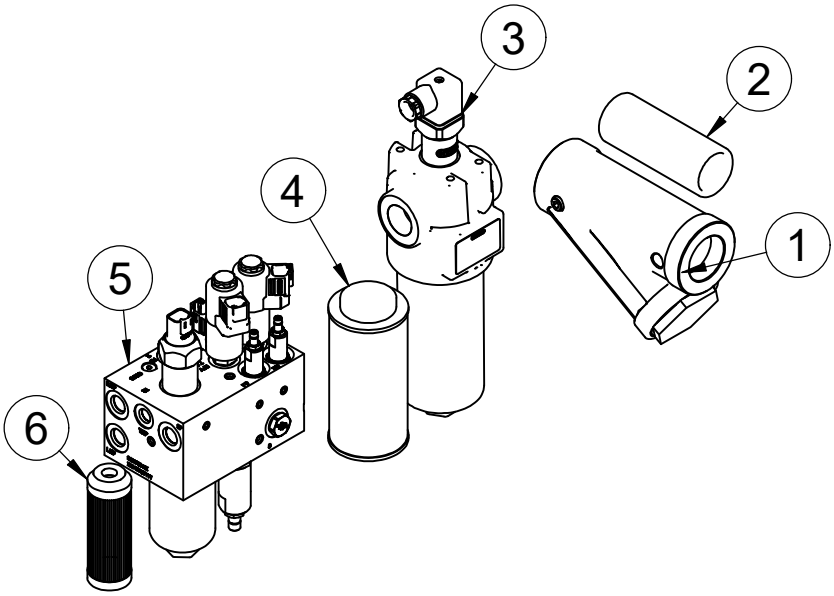

ITEM	PART NO.	DESCRIPTION	QTY
1	046472	Y-STRAINER	1
2	046473	FILTER, REPLACEMENT F/ Y-STRAINER	1
3	065141	HIGH PRESSURE CHARGE FILTER	1
4	043418	FILTER, REPLACEMENT F/ CHARGE FILTER	1
5	069958	MANIFOLD, WITH FILTER STEERING AND PITCH	1
6	070522	FILTER, REPLACEMENT F/ STEERING/PITCH MANIFOLD	1

Service Parts, Engine Filters

Note: Images for reference only

Engine Filters

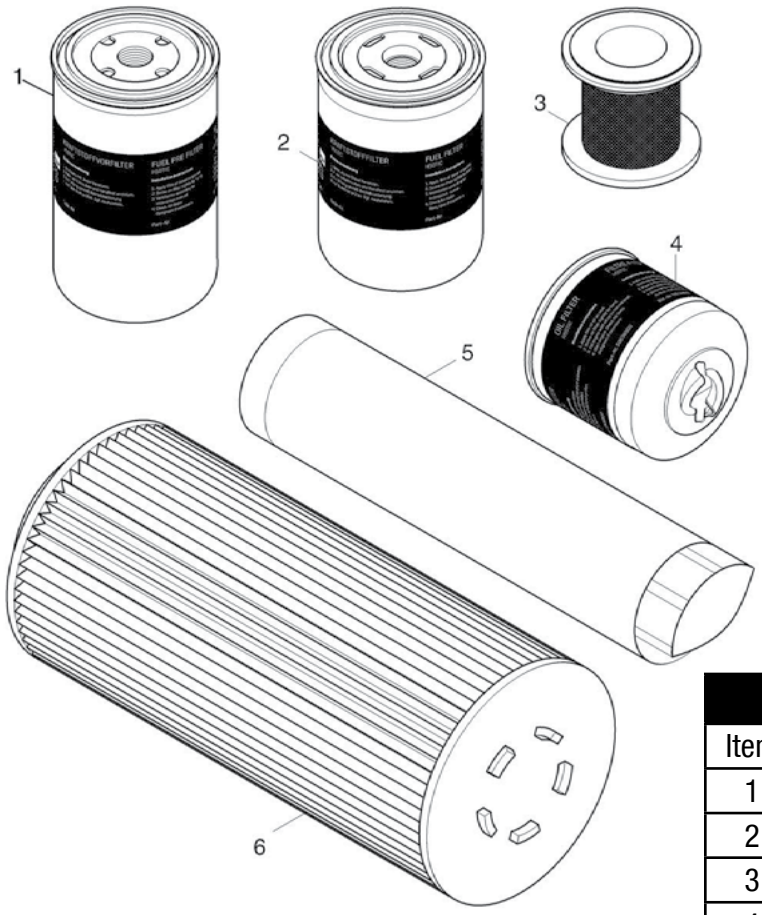

Replacement Filters			
Item	Part #	Description	Qty
1	065851	Pre-Fuel Filter (Old part)	1
2	065852	Fuel Filter (Old part)	1
3	065853	Oil Separator	1
4	065854	Oil Filter	1
5	065855	Air Filter - Secondary	1
6	065856	Air Filter - Primary	1
-	078612	Fuel Filter, Element & O-Rings	1
-	078629	Pre-Fuel Filter, In-line	1

Note: February 2023 Hatz fuel system changed from Pre-Fuel and Main Fuel Filters (OLD) to an In-line Pre-Fuel and Main Fuel filters.

Primary Hydraulic Circuit

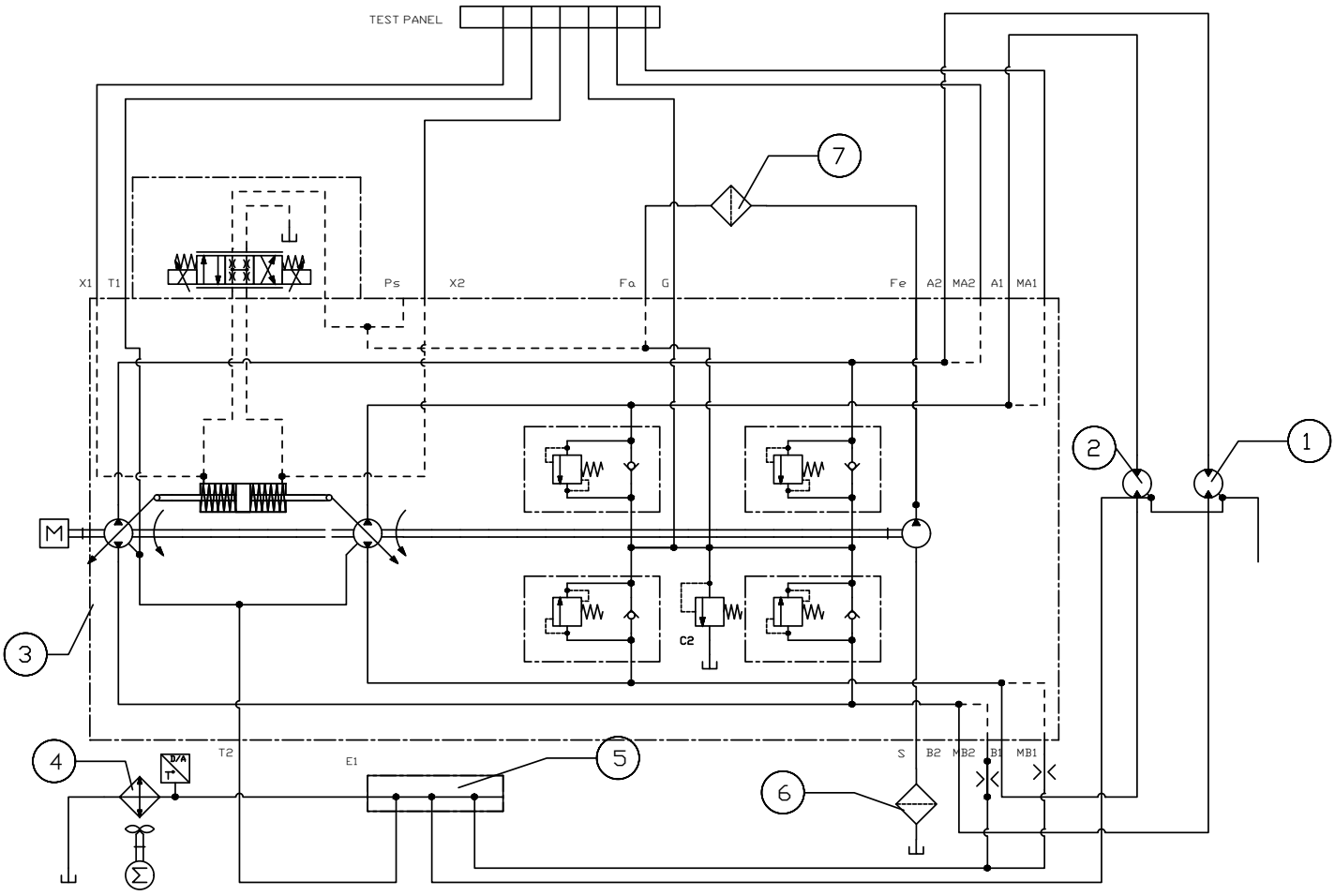

Reference	Part Number	Quantity
1	Rotor Motor	1
2	Rotor Motor	1
3	Primary Pump	1
4	HYD Cooler	1
5	Return Header	1
6	Y- Strainer	1
7	Charge Filter	1

Auxilary Hydraulic Circuit

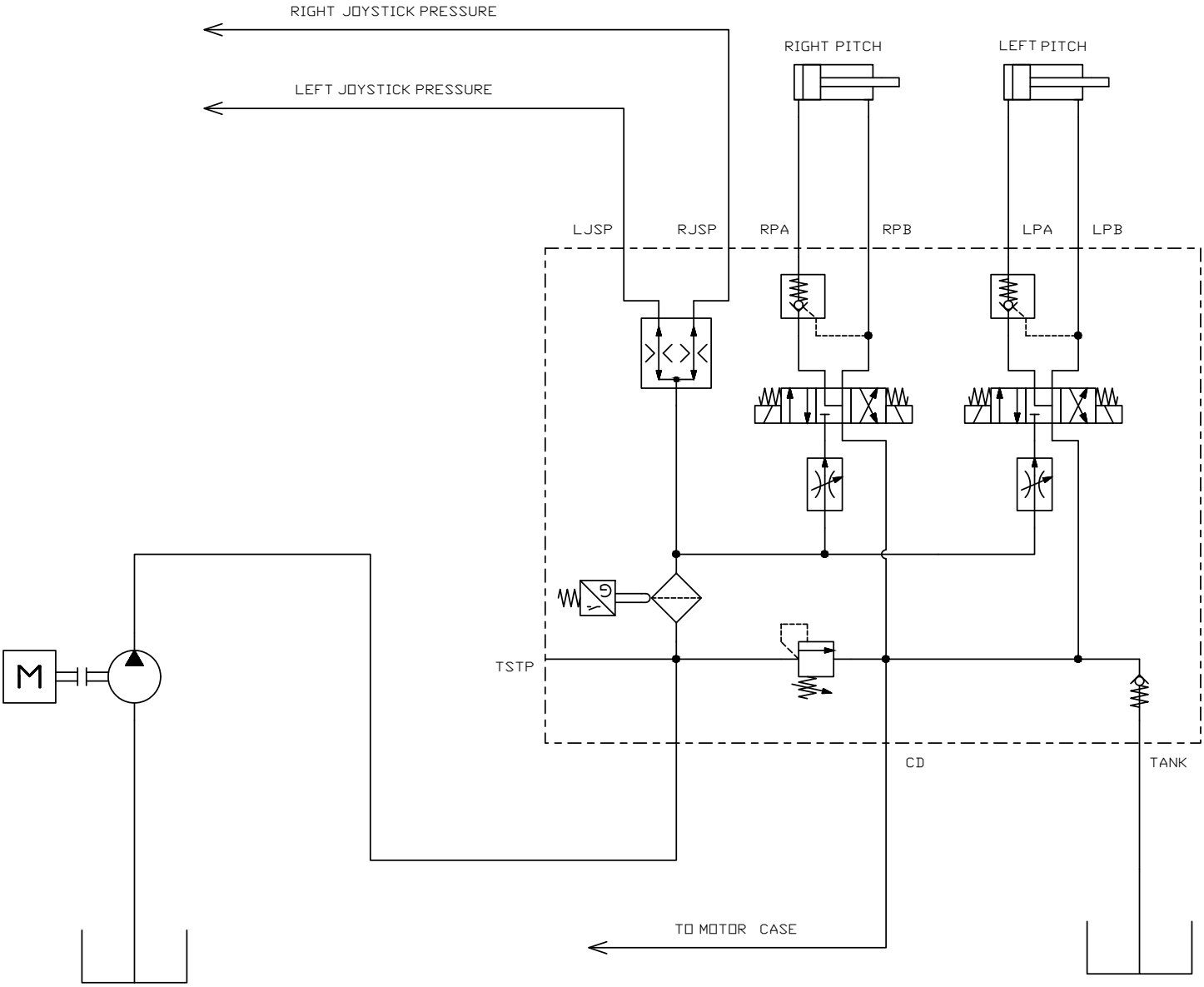

Replacement Parts

ITEM	PART #	DESCRIPTION	QTY
1	070522	Filter, Steering Element	1
2	043418	Filter, Charge	1
3	070097	Flow Divider / Combiner, Spool	1
4	070098	Check Valve - Ball	1
5	070099	Flow Control Valve, Pressure Compensated	1
6	071150	Refief Valve, Direct	1
7	071151	Solenoid Valve, 3/4”	1
8	071152	Check Valve	1
9	071153	Coil, 12VDC, Deutsch	1
10	071154	Clogging Indicator, 5-BAR	1

Hydraulic Kits

ITEM	PART #	DESCRIPTION	QTY
1	070316	Kit, Hydraulic, Fitting	1
2	070317	Kit, Hydraulic, Hose	1
3	070308	Kit, Hydraulic, Component	1

Hydraulic Schematic, Steering

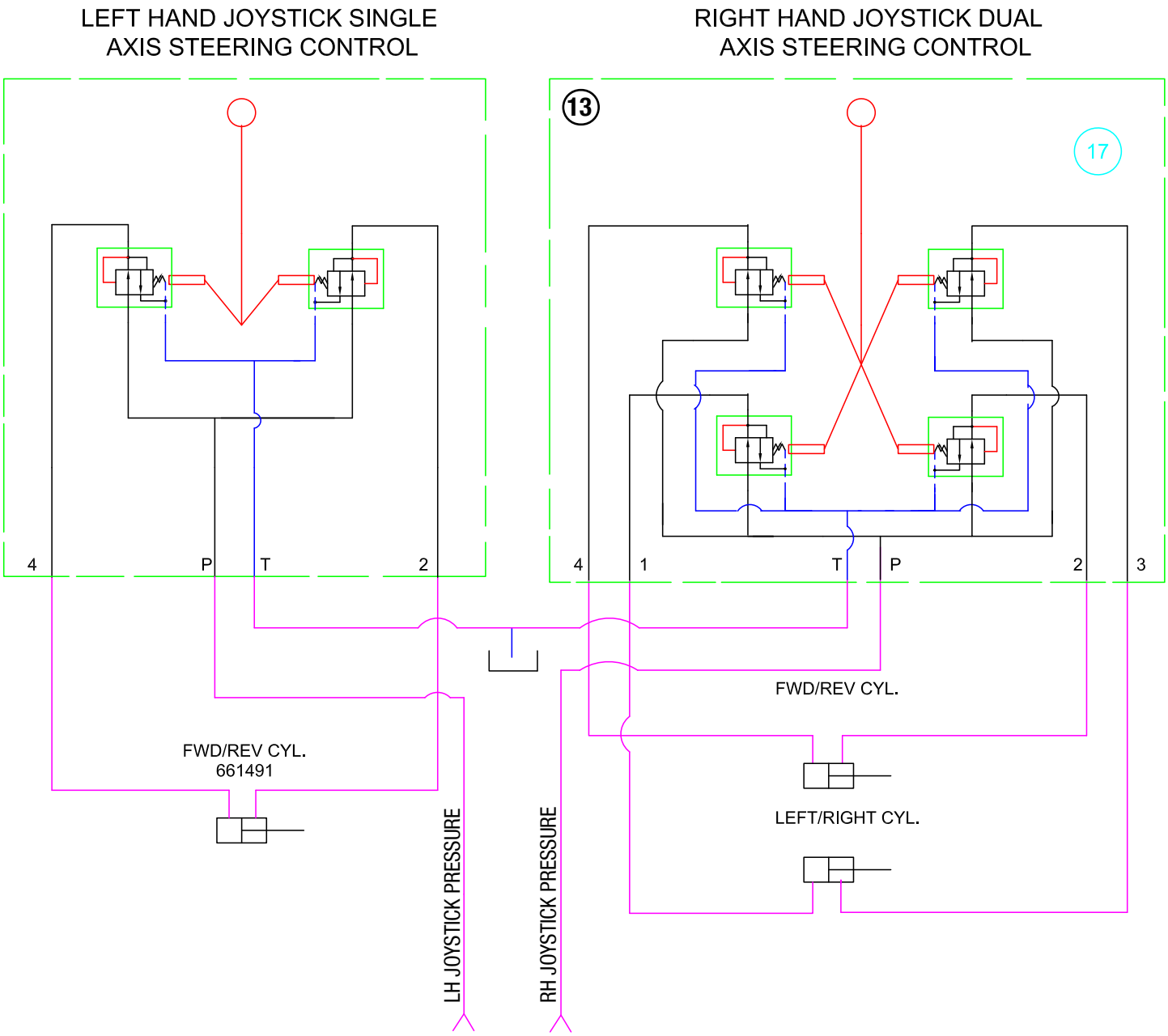

Reference	PART #	DESCRIPTION	QTY
11	048660	Cylinder, Steering L/R	1
12	064510	Joystick, LH	1
13	064511	Joystick, RH	1
14	074435	Cylinder, Steering FW/RV	2

Hydraulic System, Anti-Chatter

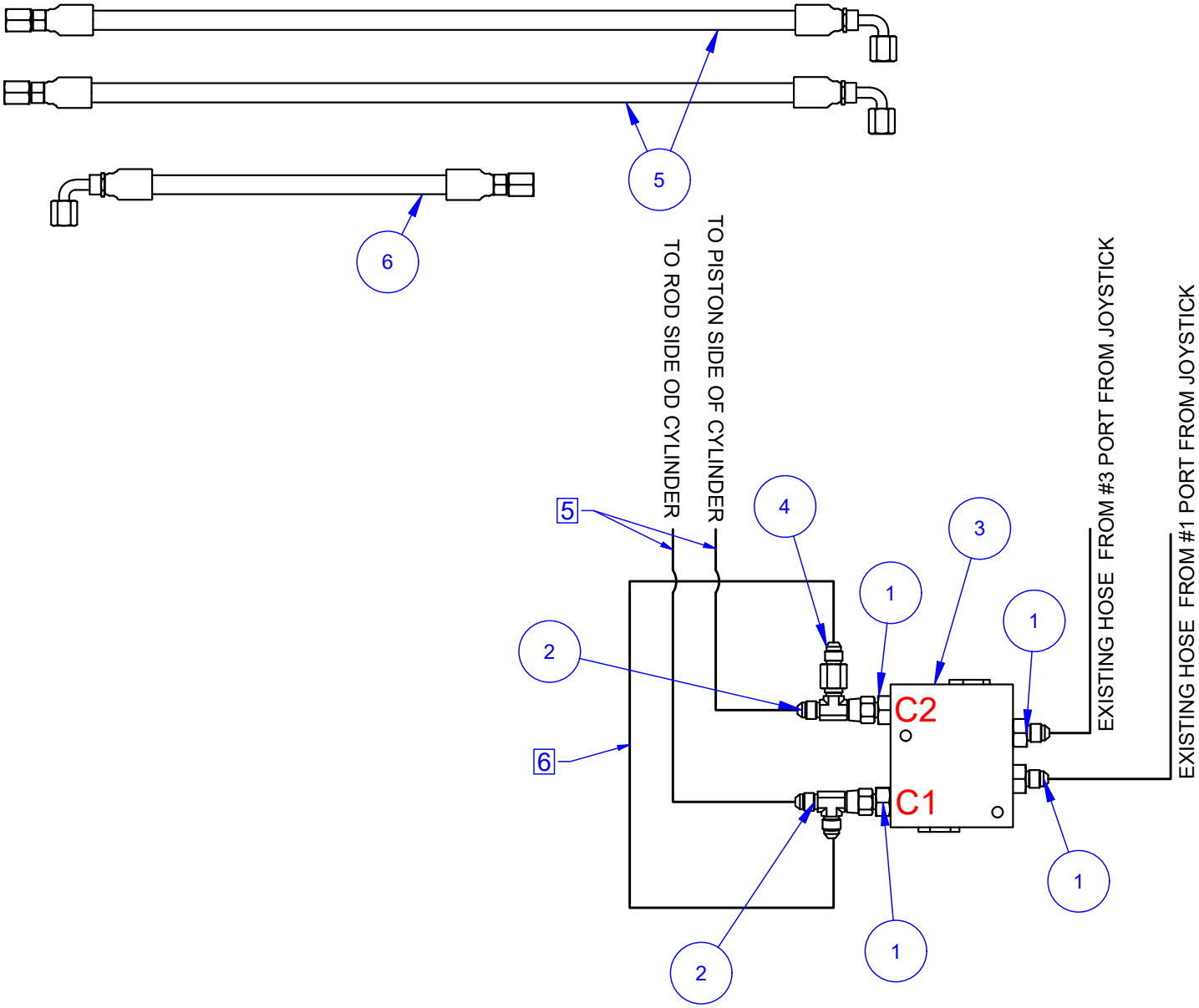

ITEM	PART NO.	DESCRIPTION	QTY
1	045922	FITTING, F6400-4-6-0 STR ML JIC-SAE (7/16-20-9/16-18 THD)	4
2	046361	FITTING, F6602-4-4-4-0 TEE JIC-FEM SAE-JIC (7/16-20 THD)	2
3	049088	VALVE, PO CHECK	1
4	057674	FITTING, ORIFICE .010	1
5	070496	HOSE, ANTI- CHATTER HOSE-1	2
6	070497	HOSE, ANTI- CHATTER HOSE-2	1

SECTION 2: DECALS

Decals - Front (Kit #: 069101)

Part # 070128
Fuse & Relay Detail

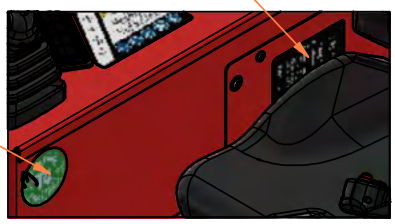

Part # 070658
Teir 4 Compliance

Decals - Rear (Kit #: 069101)

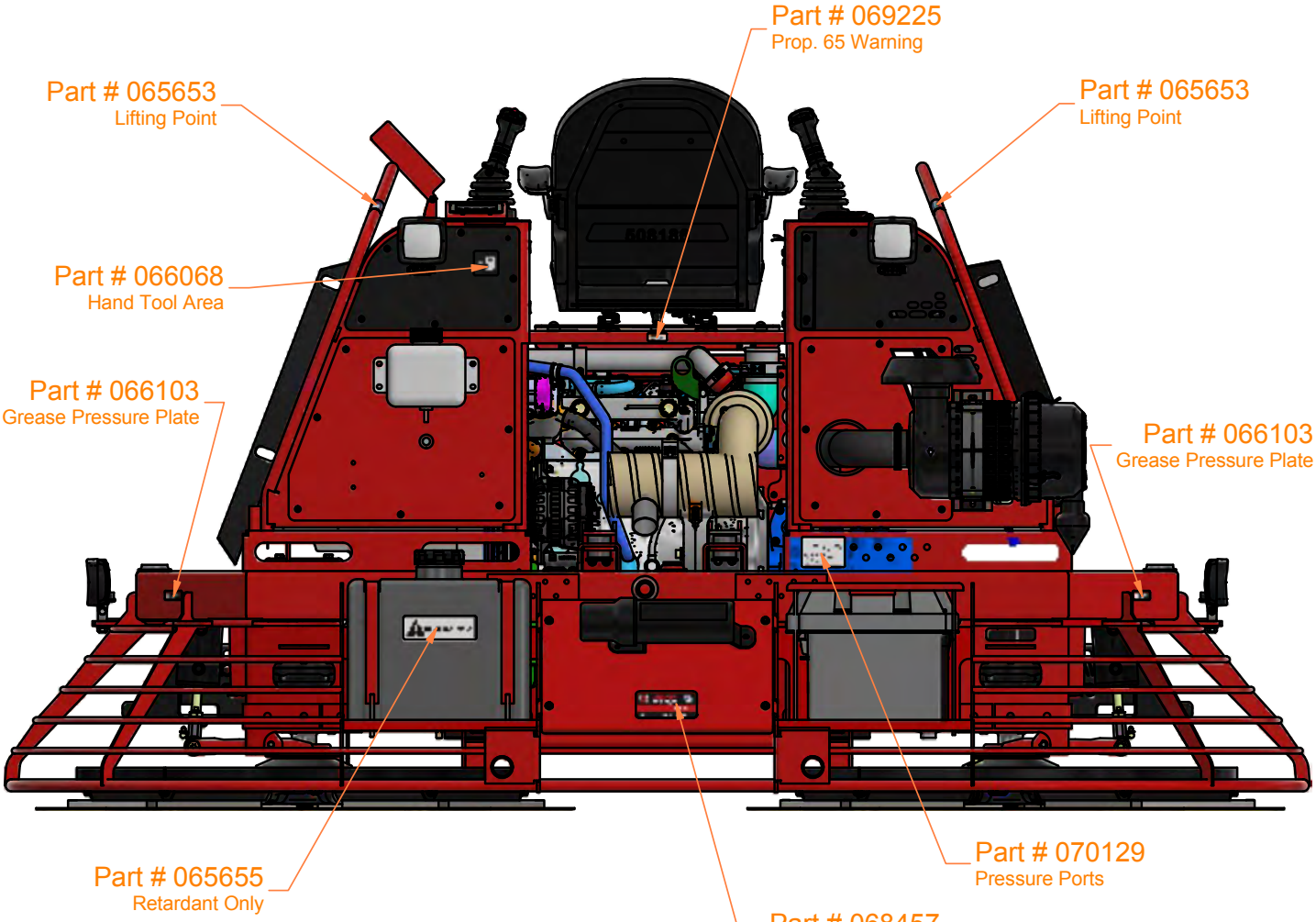

065655 Retardant Decal, Sept. 2024 forward not needed.

Decals - Top (Kit #: 069101)

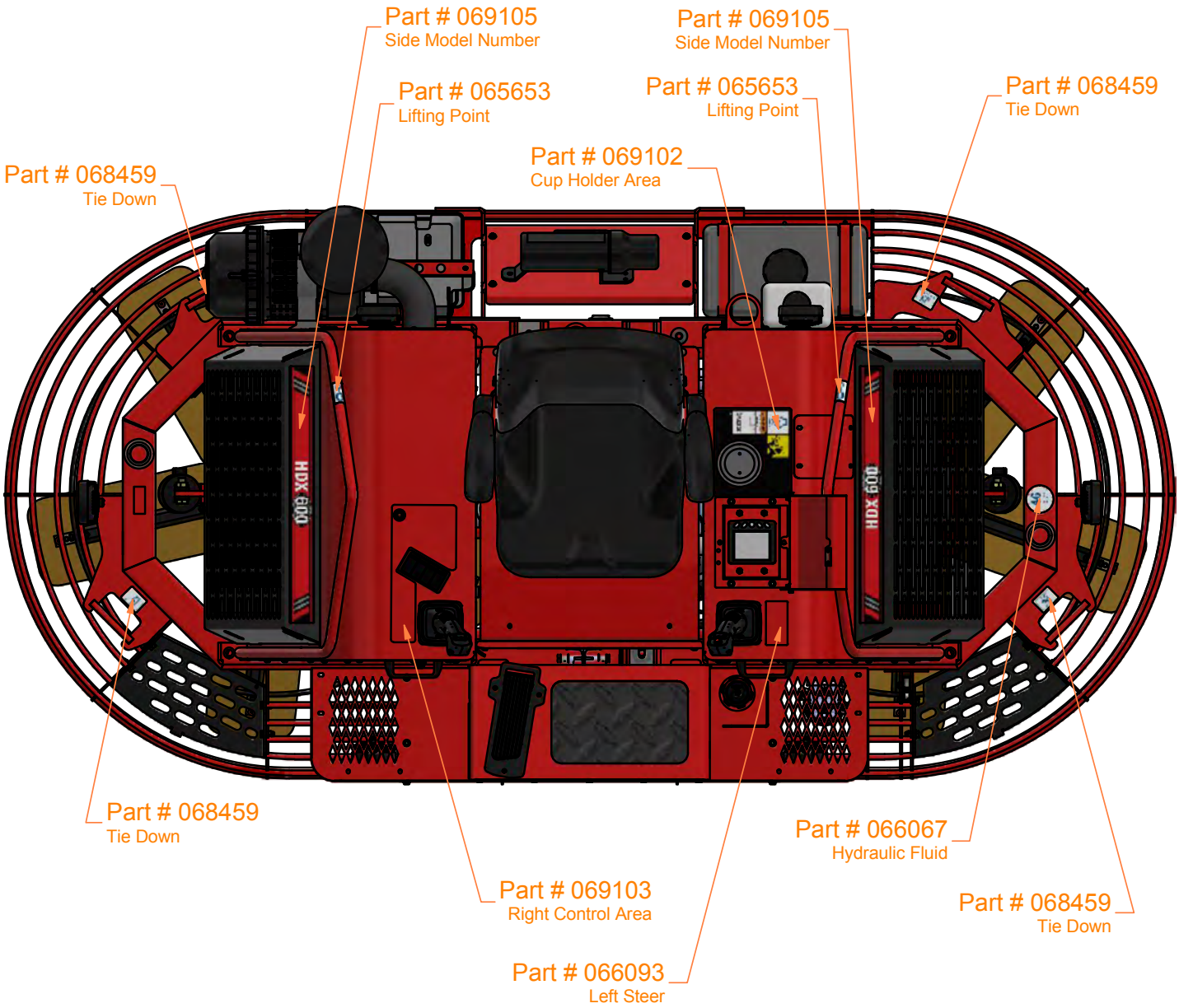

NOTE: PART NUMBER 065965 (SERIAL TAG) IS NOT SHOWN. PLACE ON BOTTOM OF SEAT SO THAT DECAL IS VISIBLE WHEN SEAT IS LIFTED UP.

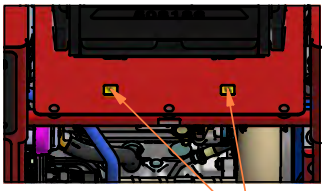

Decals - Right / Left (Kit #: 069101)

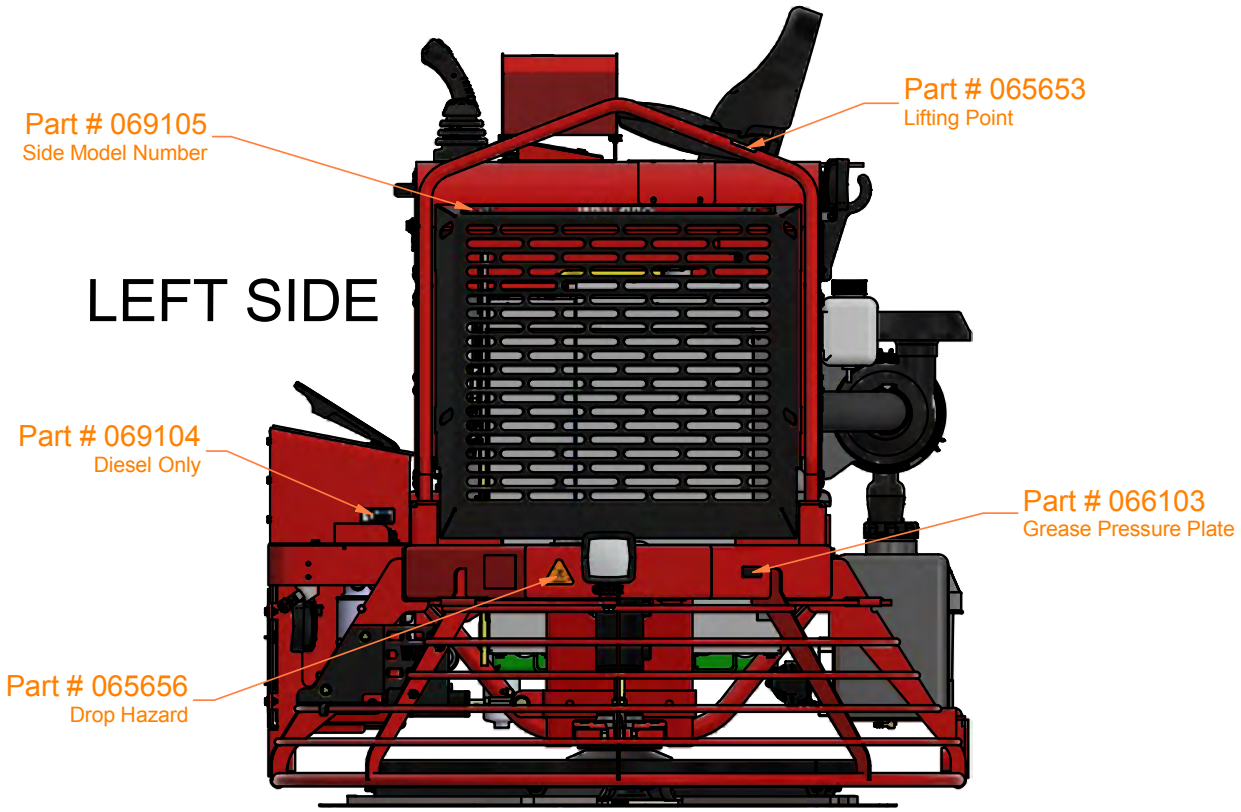

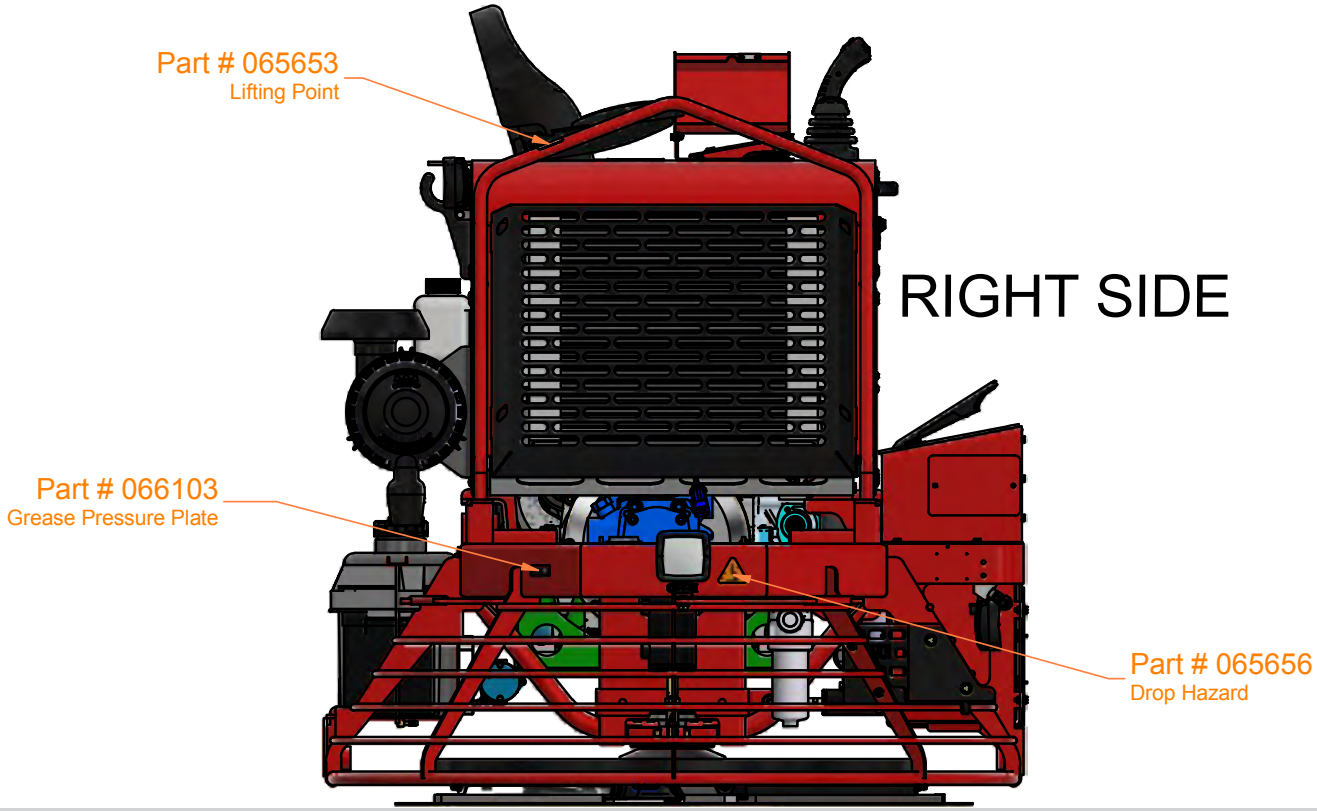

Revision Detail

MANUAL REVISION DETAIL			
REVISION #	**REVISION DATE**	**REVISION REFERENCE #**	**REVISION BY**
-	12/19	Initial Release	MW
A	01/22	Updated Covers	MK
B	06/22	Updated Trowel Arm PN	MK
C	11/24	Telematics Info, 24-523, 24-554	MK
D	10/25	Added Filter Service Parts Pages	MK
E	10/26	Updated 068290 ENG Illustration & Parts List	MK

AEC FACTORY & HEADQUARTERS

819 S. 5TH STREET
PARAGOULD, ARKANSAS 72450
870.236.7751
800.643.0095 (TOLL FREE (USA ONLY)

MAILING

PO BOX 819
PARAGOULD, ARKANSAS 72451

ALLENENG.COM

CONNECT WITH US ON SOCIAL