TRUSS SCREED

# SE12

# OPERATIONS & PARTS MANUAL

Manual Part #: 064633 | Revision: H
Language: English | Original Instructions

**NOTICE**

This manual, or a copy of it, must be kept with the machine at all times. There is a manual storage container located on the machine for your convenience.

# Engine Driven Screed

## OPERATIONS - PARTS MANUAL

**This manual covers the products listed below:**

| Part No. | Description |
|---|---|
| 022380 | Screed, Truss, Steel, Engine Driven, SE12, 2’ Section (.61M) |
| 027986 | Screed, Truss, Steel, Engine Driven, SE12, 2.5’ Section (.76m) |
| 022379 | Screed, Truss, Steel, Engine Driven, SE12, 5’ Section (1.5m) |
| 022378 | Screed, Truss, Steel, Engine Driven, SE12, 7.5’ Section (2.3m) |
| 028379 | Screed, Truss, Steel, Engine Driven, SE12,10.0’ Section (3.1m) |

# Table of Contents


| Section | Title | Page |
|---|---|---|
| | Table of Contents | 4 |
| | Limited Warranty | 6 |
| | Information Contained In This Manual | 7 |
| | Dealer Information | 8 |
| | Ordering Parts | 9 |
| | Model Number | 10 |
| | Unit Identification | 11 |
| | Technical Specifications | 12 |
| | Engine Specifications | 13 |
| | Lifting Specifications | 14 |
| | Transportation | 15 |
| | Standard Machine Dimensions | 16 |
| **SECTION 1** | **SAFETY** | **17** |
| | State Regulations Proposition 65 Warning | 18 |
| | Federal Regulation Respiratory Hazard | 19 |
| | Safety Information | 20 |
| | Safety Symbols | 21 |
| | General Safety | 22 |
| | Sound & Vibration Analysis | 29 |
| | Notes | 30 |
| **SECTION 2** | **OPERATIONS** | **31** |
| | Pre-Operation Instructions | 32 |
| | Operating Instructions | 33 |
| | Lifting Procedures | 34 |
| | Section Assembly | 35 |
| | Attaching Winches to Form Stakes | 36 |
| | Determining Left and Right of Screed Section | 37 |
| | End Handle Assembly | 38 |
| | Engine Mount Assembly | 39 |
| | String Lining | 40 |
| **SECTION 3** | **SERVICE** | **41** |
| | Periodic Maintenance Schedule | 42 |
| | Cleaning Procedure | 44 |

# Table of Contents, continued


| Section | Title | Page |
|---|---|---|
| **SECTION 4** | **PARTS** | **45** |
| | Factory Service Information | 46 |
| | Replacement Part Procedure | 47 |
| | 4.1 - Engine Mount, Illustration | 48 |
| | 4.2 - 2 Foot Section, Illustration | 50 |
| | 4.3 - 2.5 Foot Section, Illustration | 52 |
| | 4.4 - 5 Foot Section, Illustration | 54 |
| | 4.5 - 7.5 Foot Section, Illustration | 56 |
| | 4.6 - 10 Foot Section, Illustration | 58 |
| | 4.7 - End Handle Assembly, Illustration | 60 |
| | 4.8 - End Handle Manual Winch Assembly, Illustration | 62 |
| | 4.9 - Winch Assembly, Illustration | 64 |
| | 4.10 - (OLD) Hydraulic Winch Assembly, Illustration | 66 |
| | 4.10 - (OLD) Hydraulic Winch Kit, Parts List | 69 |
| | 4.11 - (E-STOP) RH Hydraulic Winch Assembly, Illustration | 70 |
| | 4.12 - (E-STOP) LH Hydraulic Winch Assembly, Illustration | 74 |
| | 4.13 - (E-STOP) RH/LH Hydraulic Winch Hoses | 78 |
| | 4.14 - Flex Coupler Assembly, Illustration & Parts List | 80 |
| | 4.15 - U-Joint Assembly, Illustration & Parts List | 81 |
| | 4.16 - Crown Invert Bracket Assembly, Illustration | 82 |
| | 4.17 - End Mount Engine Assembly, Illustration | 84 |
| | 4.18 - Bridge Deck Handle Assembly, Illustration & Parts List | 86 |
| | 4.19 - Bridge Deck Roller Wheel Assembly, Illustration & Parts List | 87 |
| | 4.20 - Bridge Deck End Bracket Assembly, Illustration | 88 |
| | 4.21 - SE12 Eng (Honda) Service Parts, for GX270 | 90 |
| | 4.22 - SE12 Eng (Honda) Service Parts, for GX340 | 91 |
| | 4.23 - Kit, Decals (068412) SE12 Screed Section | 92 |
| | 4.24 - Kit, Decals (068421) SE12 Engine | 93 |
| | 4.25 - Kit, Decals (068512) Screed Power Winch | 94 |
| | 4.26 - Kit, Decals (068513)SE12 Manual Winch End Handle | 95 |
| | Revision Detail | 96 |

# Limited Warranty

I. LIMITED WARRANTY & LIMITATION OF LIABILITY

Allen Engineering Corporation ("Allen") warrants its products to be free of defects in material or workmanship for: TWO YEARS FROM END USER'S DATE OF PURCHASE, SUBJECT TO THE EXCEPTIONS AND SHORTER WARRANTY PERIODS DESCRIBED HEREIN.

The warranty period begins on the date of purchase by the End User of the product. All warranty is based on the following limited warranty terms and conditions, including the disclaimer of all implied warranties of any type and the disclaimer of consequential damages.

1. Allen's obligation and liability under this warranty are limited to repairing or replacing parts if, after Allen's inspection, there is determined to be a defect in material or workmanship. Allen reserves the choice to repair or replace.
2. All warranty-related parts must be purchased in advance through an Allen dealer. The parts will be made available to the Allen Distributor, Dealer, or Rental Center from whom the End User purchased the product.
For machines being prepared, a warranty request form and/ or RGA request form must be submitted to AEC after the repairs are completed.
3. Replacement warranty parts, installed in the product, are warranted only for the remainder of the warranty period of the product as though they were the original parts.
4. BATTERY POWERED PRODUCTS ARE WARRANTED FOR ONE YEAR FROM END USER'S DATE OF PURCHASE.
5. Allen does not warranty engines or batteries. Engine warranty claims should be made directly to an authorized factory service center for the particular engine manufacturer. Batteries are not warranted due to unknown treatment during transport, etc., and any battery claims should be directed to the battery manufacturer.
6. Allen's warranty does not cover the normal maintenance of products or their components(such as engine tune-ups and oil & filter changes). The warranty also does not cover normal wear and tear items(such as belts, tires, blades, pans and other consumables).
7. Hydraulic Component's are required to be maintained per Allen's mandatory service intervals in each machines owners manual. OEM Allen hydraulic filters and consumables are required to service machines during the warranty period. Failure to use OEM Allen hydraulic filters will result in denied warranty.
8. Allen's warranty will be void if it is determined that the defect resulted from operator abuse, failure to perform normal maintenance on the product, modification to product, alterations, or repairs made to the product without the written approval of Allen. Allen specifically excludes from warranty any damage to any trowels resulting from a drop or impact to the rotors.
9. Impact damage to gearboxes is not covered under the Allen warranty and is deemed customer abuse.
10. Impact damage to trowels in any way is not covered under the Allen Warranty and is deemed customer abuse. ( Example: Dropping a machine)
11. Allen will pay shop labor on warranty items at the Allen Shop Labor Rate in existence on the date of the warranty claim. An Allen labor chart will determine the time allowed to complete a repair and will govern the shop labor hours that will be allowed.
12. Allen will credit the cost of ground freight on warranty replacement parts after approval of the warranty claim. No warranty replacement parts will be shipped air-freight at the expense of Allen. Allen does not pay any inbound freight.
13. ALLEN ENGINEERING CORPORATION'S WARRANTY POLICY WILL NOT COVER THE FOLLOWING: TAXES; SHOP SUPPLIES; ENVIRONMENTAL SURCHARGES; AIR FREIGHT; TRAVEL TIME;LOSS OF TIME;INCONVENIENCE;LOSS OF RENTAL REVENUE; RENTAL COSTS OF EQUIPMENT USED TO REPLACE THE PRODUCT BEING REPAIRED;LOSS OF USE OF THE PRODUCT; COMMERCIAL LOSS; OR ANY OTHER CHARGES WHATSOEVER OR ANY LIABILITIES FOR DIRECT, INCIDENTAL, OR CONSEQUENTIAL DAMAGE OR DELAY.
14. ALLEN ENGINEERING CORPORATION MAKES NO OTHER WARRANTY, EXPRESSED OR IMPLIED. THIS LIMITED WARRANTY IS IN LIEU OF THE WARRANTY OF MERCHANTABILITY AND FITNESS. THERE ARE NO OTHER WARRANTIES THAT EXTEND BEYOND THE DESCRIPTION ON THIS DOCUMENT.
15. No Allen employee or representative is authorized to change this warranty in any way or grant any other warranty unless such change is made in writing and signed by an officer of Allen Engineering Corporation.
16. Warranty claims must be submitted within 30 days from the date of failure.
17. Once a warranty claim has been submitted, AEC has up to 90 business days to process the request.
18. Standard service part warranty will not exceed 90 days from the date of purchase. Exceptions to this are:
#1 Gearboxes: 1year warranty from date of purchase.
#2 Electrical Components: 30 day warranty from date of purchase. This applies to wiring harnesses, transmitters, ECUs, display screens, and toggle switches.
19. All purchased components are subject to the inspection and warranty of the respective manufacturer. This inspection may extend beyond 90 days.
20. If warranty is suspected do not disassemble any hydraulic or electrical components. Failure to comply with this instruction will lead to denial of a warranty claim.

# Information Contained In This Manual

This manual provides information and procedures to safely operate and maintain the Allen Machine.

For your own safety and protection from personal injury, carefully read, understand, and observe the safety instructions described in this manual. Keep this manual or a copy of it with the machine at all times.

ALWAYS operate this machine in accordance with the instructions described in this manual. A well maintained piece of equipment will provide many years of trouble free operation.

This manual is divided into the following sections:

**SECTION 1 SAFETY**

**SECTION 2 OPERATIONS**

**SECTION 3 SERVICE**

**SECTION 4 PARTS**

Complete any warranty requirements as specified by the engine manufacturer in their instructions found inside the manual box located on the back of the riding trowel operator's seat.

Your engine and clutch is not manufactured by Allen Engineering Corporation, Inc, and therefore is not covered under Allen Engineering Corporation, Inc warranty.

Your engine manufacturer should be contacted if you wish to purchase a parts manual or a repair manual for your engine.

Refer to enclosed owners engine manual for complete O&M instructions. See your battery manufacturer for battery warranty.

# Dealer Information

Your Dealer has Allen Engineering Corporation trained mechanics and original Allen replacement parts. Always contact the Allen Dealer who sold you this machine for Allen Certified repairs and replacement parts.

Place Allen Dealer information below for future reference.

Dealer Name: _____

Phone #: (____) - ____ - _____

Address: _____

City:_____State:_____ Zip:_____

Salesman: _____Mobile Phone _____

Additional Comments: _____

_____

_____

# Ordering Parts

Section 4.0 contains illustrated parts lists for help in ordering replacement parts for your machine. Follow the instructions below when ordering parts to insure prompt and accurate delivery:

1. All orders for service parts - include the serial number for the machine. Shipment will be delayed if this information is not available.

2. Include correct description and part number from the “PARTS” section of this manual.

3. Specify exact shipping instructions, including the preferred routing and complete destination address.

4. **DO NOT** return parts to AEC without receiving written authorization from AEC. All authorized returns must be shipped pre-paid.

5. When placing an order, please contact the AEC dealer nearest you.

**NOTE**

ALL INFORMATION, SPECIFICATIONS, AND ILLUSTRATIONS IN THIS MANUAL ARE SUBJECT TO CHANGE WITHOUT NOTICE AND ARE BASED ON THE LATEST INFORMATION AT THE TIME OF PUBLICATION.

# Model Number

**Manufacturer's Codes:**

When ordering parts or requesting service information, you will ALWAYS be asked to specify the model of the machine. The legends below specifically defines each significant character or group of characters of the Model Number and Serial Number codes.

**Model Number**

SSE12225M

**Series**
Length, 'M' Manual Winch or 'P' Powered Winch

**Steel Engine Driven Truss Screed**

# Unit Identification

**Unit Identification Plate Location:**

Please record the information found on this plate below so it will be available should the identification plate become lost or damaged. When ordering parts or requesting service information, you will ALWAYS be asked to specify the model and serial numbers (if applicable) of the machine.

**FILL IN FOR FUTURE REFERENCE**

Model Number:_____

Serial Number:_____

Date Purchased:_____

Purchased From:_____

# Technical Specifications

| Engine Powered Screed Specifications | | |
|---|---|---|
| Recommended Slump | 3 in (76 mm) | |
| Max. Concrete Depth | 8 in (203 mm) | |
| Max Screed Width | 65 ft (19.8 m) | |
| **PART #** | **DESCRIPTION** | **Weight lb. (kg)** |
| 022380 | 2’ (.61 m) truss with eccentric shaft vibration | 37 (17) |
| 027986 | 2.5’ (.76 m) truss with eccentric shaft vibration | 46 (21) |
| 022379 | 5’ (1.5 m) truss with eccentric shaft vibration | 90 (41) |
| 022378 | 7.5’ (2.3 m) truss with eccentric shaft vibration | 135 (61) |
| 028379 | 10’ (3.1 m) truss with eccentric shaft vibration | 180 (82) |
| **ACCESSORIES** | | |
| **PART #** | **DESCRIPTION** | **Weight lb. (kg)** |
| 025894 | End handles (two each) | 36 (16) |
| 018993 | Manual Winches, set of two | 40 (18) |
| 028363 | Hydraulic Winches, includes 2.5’ truss | 261 (118) |
| 527001 | Adjustable end brackets with rollers | 22 (10) |
| 527000 | Adjustable end brackets without rollers | 20 (9) |
| 046708 | Invert/crown kit, for adjustments up to ¼-inch per foot | 12 (6) |
| 027879 | 9 HP Engine (Honda) Low Profile Kit | 115 (52) |
| 075815 | 9.5 HP Engine (Kohler) Kit | 122 (55) |
| 028327 | 11 HP Engine (Honda) Low Profile Kit | 118 (54) |
| 543000 | Truss screed dolly (standard) | 45 (20) |
| 543001 | Truss screed dolly (heavy duty) | 87 (39) |

- Vibration proof Welds with Exclusive Vibration-Dampening System.
- Bolt-On Blades with Quick Connecting Splice Plates Front and Back at Each Truss Section using 1/2-13 Nuts and Bolts Throughout.
- Balanced Design Truss Height to Overall Base Width Provides Equilateral Triangle Strength for Obtaining Precise Grade Control and Structure Integrity.
- Top Pipe Coupling System Provides for Crowned or Invert Slab Section without Loosening Bottom Splice Blade Bolts. Special Crowns or Inverts are obtainable with Ball Joint Top Pipe Coupler or Crown Invert Bracket. Crowns greater then 1/8”/ft are considered special.
- NOTE: Select Screed Width to Allow Minimum Overhangs Past Forms; 6” Overhangs are Ideal.

# Engine Specifications

| MODEL | Honda GX270 | Honda GX340 |
|---|---|---|
| Type | Air-cooled 4 stroke, Single Cylinder, OHV, Horizontal Shaft Gasoline Engine | Air-cooled 4 stroke, Single Cylinder, OHV, Horizontal Shaft Gasoline Engine |
| Bore X Stroke | 3.0 in. X 2.3 in. (77 mm x 58 mm) | 3.4 in. X 2.5 in. (88 mm x 64 mm) |
| Displacement | 16.4 cu-in. (270 cc) | 23.7 cu-in. (389 cc) |
| Max. Output | 9.0 H.P. @3600 RPM | 11.0 H.P. @3600 RPM |
| Fuel Tank Capacity | Approx. 1.95 U.S. Gallons (6.0 Liters) | Approx. 1.95 U.S. Gallons (6.0 Liters) |
| Fuel | Unleaded Gasoline | Unleaded Gasoline |
| Lube Oil Capacity | 1.06 qt. (1.1 liters) | 1.06 qt. (1.1 liters) |
| Oil Type | 4-Stroke API, SFor SG SAE 10W-30 General Use | 4-Stroke API, SFor SG SAE 10W-30 General Use |
| Speed Control Method | Centrifugal Fly-weight Type | Centrifugal Fly-weight Type |
| Cooling System | Forced Air | Forced Air |
| Starting Method | Recoil Start | Recoil Start |
| Spark Plug Type | BPR6ES NGK | BPR6ES NGK |
| Spark Plug Gap | 0.028-0.031 in. (0.70 - 0.80 mm) | 0.028-0.031 in. (0.70 - 0.80 mm) |
| Dimension (L x Wx H) | 15.0 x 16.8 X 16.6 in. (381 X 428 X 422 mm) | 15.9 x 18.1 X 17.6 in. (406 X 460 X 448 mm) |
| Dry Net Weight | 55.1 lbs (25 Kg.) | 69.8 lbs (31.7 Kg.) |

| MODEL | Kohler CH395 |
|---|---|
| Type | Air-cooled 4 stroke, OHV, Horizontal Shaft Gasoline Engine |
| Bore X Stroke | 3.1 in. X 2.3 in. (78 mm x 58 mm) |
| Displacement | 16.9 cu-in. (277 cc) |
| Max. Output | 9.5 HP |
| Fuel Tank Capacity | Approx. 1.79 U.S. Gallons (6.8 Liters) |
| Fuel | Unleaded Gasoline |
| Lube Oil Capacity | 1.4 qt. (1.3 liters) |
| Oil Type | 10W-30 General Use |
| Speed Control Method | Electric |
| Starting Method | Recoil Start |
| Spark Plug Gap | 0.028-0.031 in. (0.70 - 0.80 mm) |
| Dimension (L x Wx H) | 15.9 x 16.8 X 16.7 in. (40.4 X 42.7 X 42.4 cm) |
| Dry Net Weight | 61.7 lbs (27.8 Kg.) |

# Lifting Specifications

The following procedure and illustration describe how to lift the screed.

- Attach the U-shaped lifting bracket and associated hardware to the top of each truss frame section as shown in the illustration below. Tighten bracket securely so that it will not slip.
- Utilize a spreader bar of proper length and lifting capacity. Secure lifting straps from both ends of the spreader bar to the attached lifting brackets.
- Connect lifting cables from the spreader bar to the lifting hook of a crane or forklift. Ensure that the lifting hook and chain are of appropriate lifting capacity.
- Use crane or forklift to hoist screed onto a flatbed truck for transporting or onto the form for use.

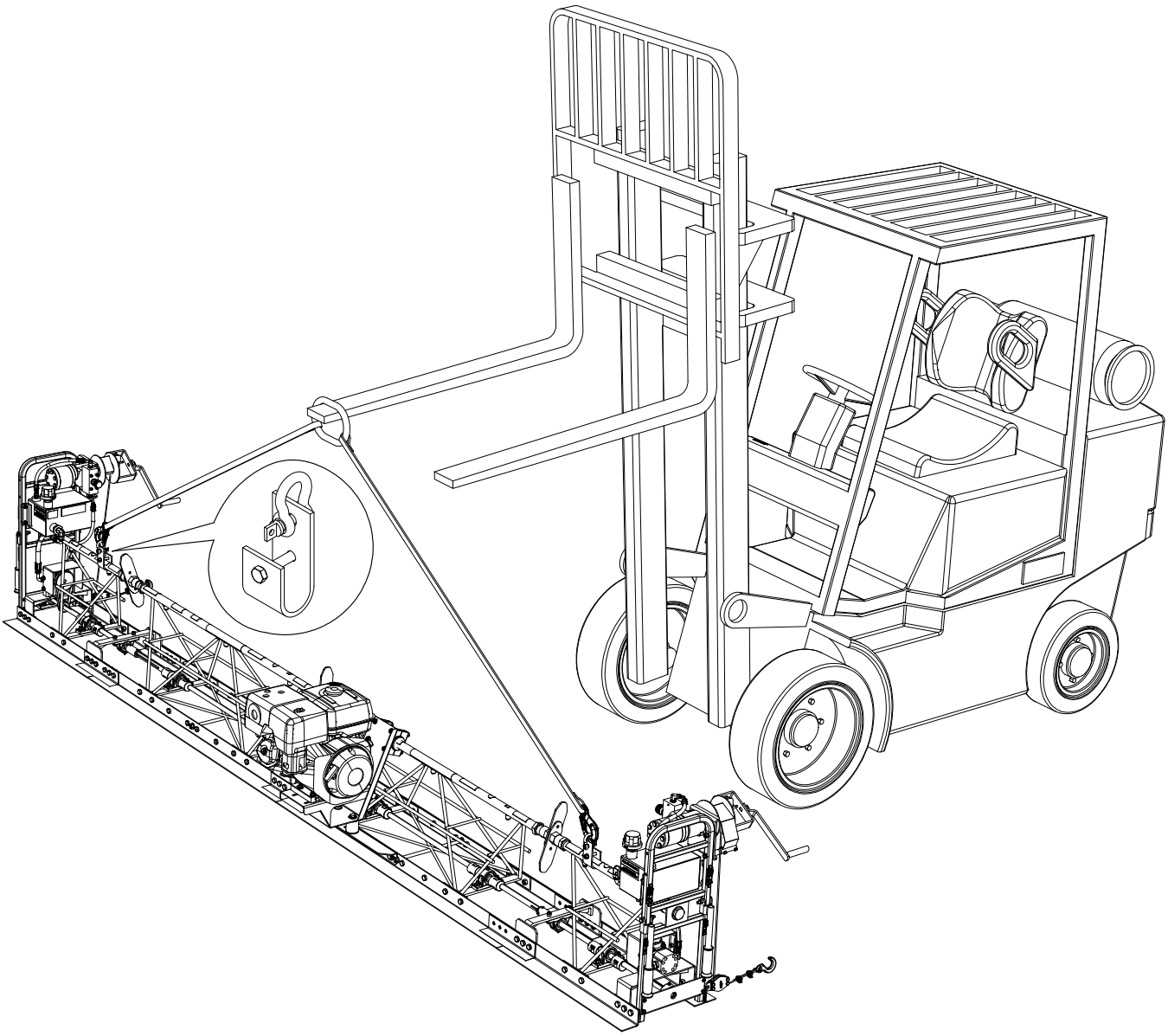

Place the screed on a flatbed truck or a trailer during transportation as shown below. Attach suitable tie-down straps to the screed to secure it. Route tie-down straps over truss frame sections as required.

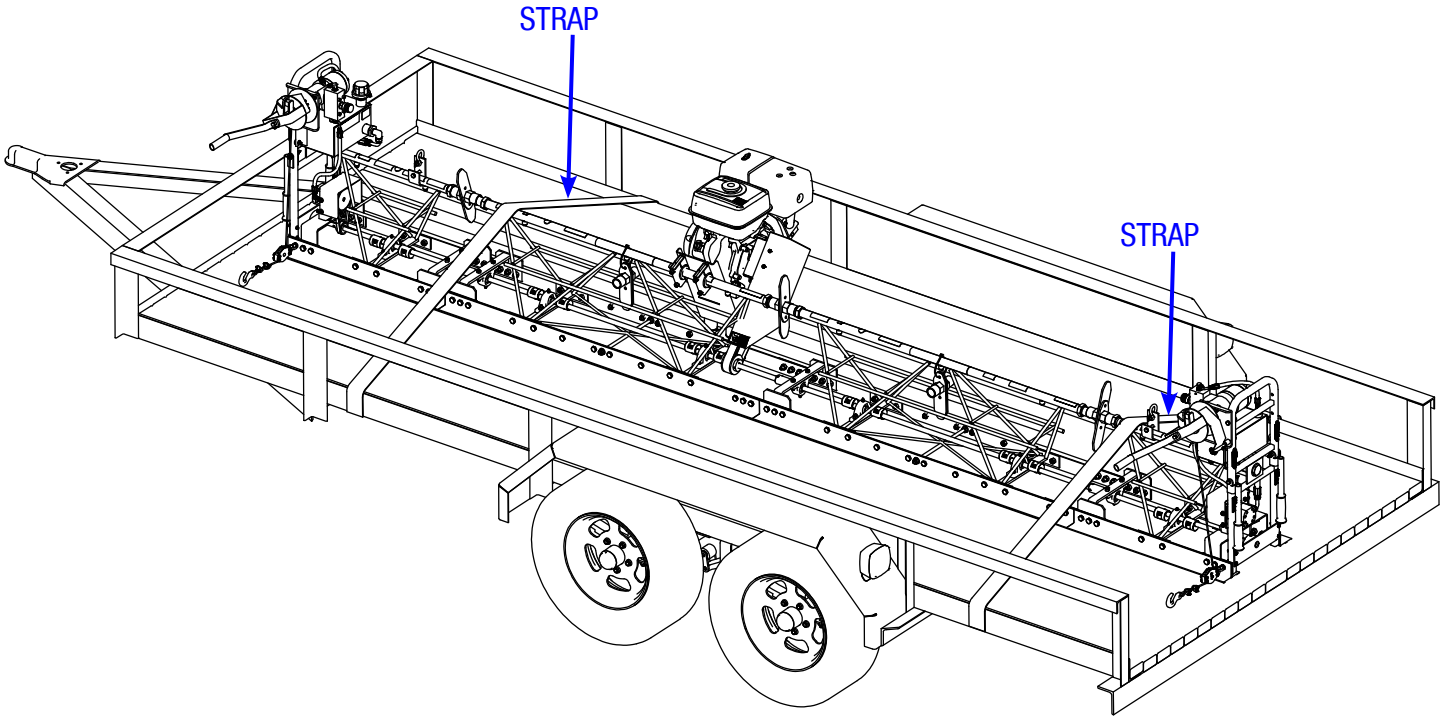

# Standard Machine Dimensions

The dimensions of the air powered screed in this manual are illustrated on this page. the geight and width are in Figure 1 and the lengths of the different screed sections available are illustrated in Figure 2.

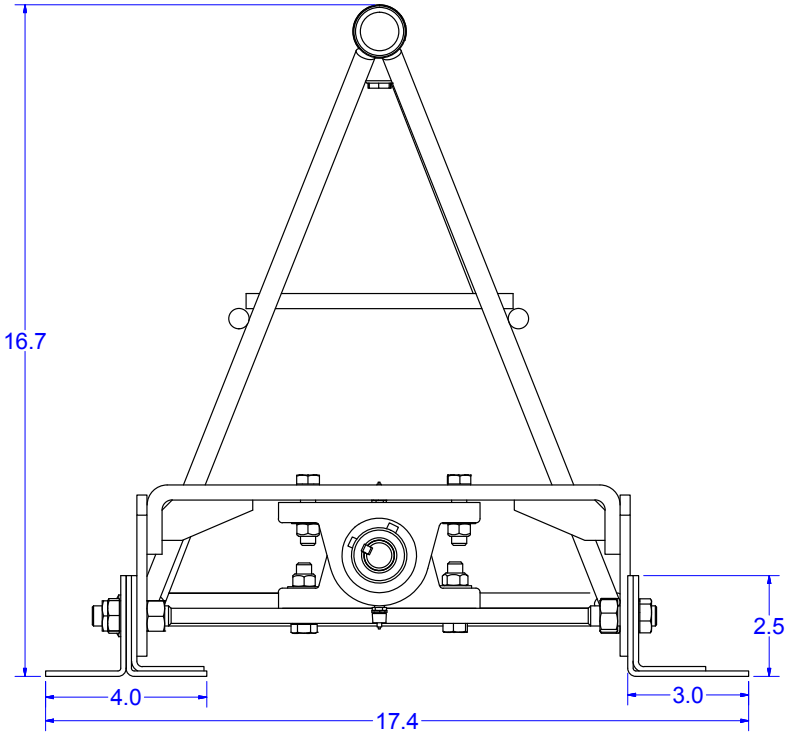


**FIGURE 1**

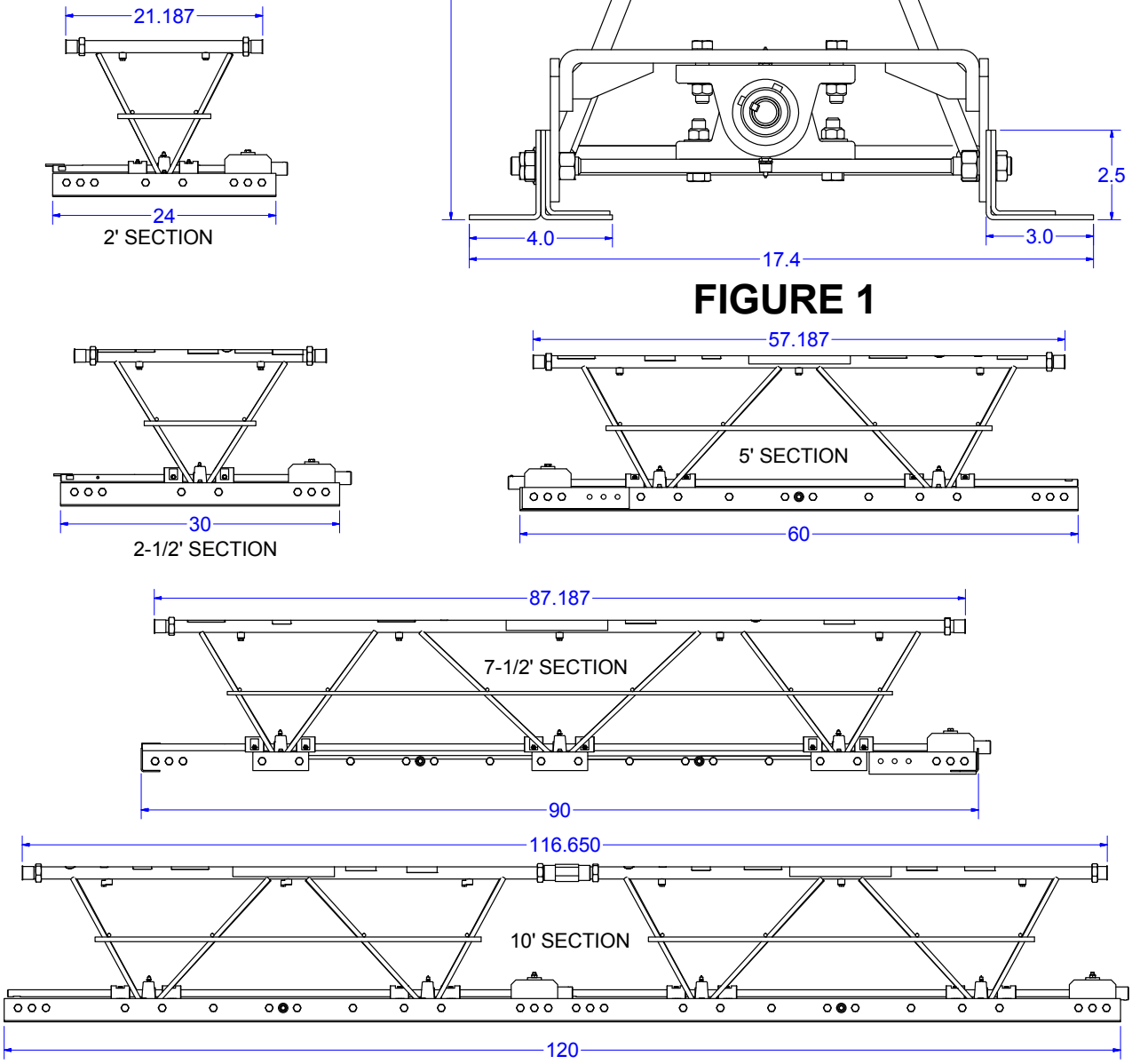


**FIGURE 2**

# SECTION 1: SAFETY

# State Regulations Proposition 65 Warning

**WARNING**

**CALIFORNIA — Proposition 65 Warning**

Engine exhaust and some of its constituents, and some dust created by power sanding, sawing, grinding, drilling and other construction activities contains chemicals known to the State of California to cause cancer, birth defects and other reproductive harm. Some examples of these chemicals are:

- Lead from lead-based paints.
- Crystalline silica from bricks.
- Cement and other masonry products.
- Arsenic and chromium from chemically treated lumber.

Your risk from these exposures varies, depending on how often you do this type of work. To reduce your exposure to these chemicals: ALWAYS work in a well ventilated area, and work with approved safety equipment, such as dust masks that are specially designed to filter out microscopic particles.

# Federal Regulation Respiratory Hazard

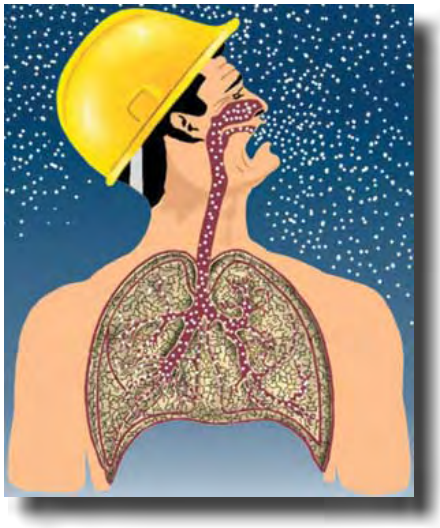

## ⚠ WARNING

### RESPIRATORY HAZARDS

Grinding/cutting/drilling of masonry, concrete, metal and other materials can generate dust, mists and fumes containing chemicals known to cause serious or fatal injury or illness, such as respiratory disease, cancer, birth defects or other reproductive harm. If you are unfamiliar with the risks associated with the particular process and/or material being cut or the composition of the tool being used, review the material safety data sheet and/or consult your employer, the material manufacturer/supplier, governmental agencies such as OSHA and NIOSH and other sources on hazardous materials. California and some other authorities, for instance, have published lists of substances known to cause cancer, reproductive toxicity, or other harmful effects.

Control dust, mist and fumes at the source where possible. In this regard use good work practices and follow the recommendations of the manufacturers or suppliers, OSHA/NIOSH, and occupational and trade associations. Water should be used for dust suppression when wet cutting is feasible. When the hazards from inhalation of dust, mists and fumes cannot be eliminated, the operator and any bystanders should always wear a respirator approved by NIOSH/MSHA for the materials being used.

## ⚠ WARNING

### SILICOSIS WARNING

Grinding/cutting/drilling of masonry, concrete, metal and other materials with silica in their composition may give off dust or mists containing crystalline silica. Silica is a basic component of sand, quartz, brick clay, granite and numerous other minerals and rocks. Repeated and/or substantial inhalation of airborne crystalline silica can cause serious or fatal respiratory diseases, including silicosis. In addition, California and some other authorities have listed respirable crystalline silica as a substance known to cause cancer. When cutting such materials, always follow the respiratory precautions mentioned above.

# SECTION 1 SAFETY

## Safety Information

**DO NOT** operate or service the equipment before reading the entire manual. Safety precautions should be followed at all times when operating this equipment. Failure to read and understand the safety messages and operating instructions could result in injury to yourself and others.

### SAFETY NOTES

The four safety notes shown below will inform you about potential hazards that could injure you or others. The safety notes specifically address the level of exposure to the operator and are preceded by one of four words: DANGER, WARNING, CAUTION or NOTICE.

| | |
|---|---|
| DANGER | Indicates a hazardous situation which, if not avoided, **will** result in death or serious injury. |
| WARNING | Indicates a hazardous situation which, if not avoided, **could** result in death or serious injury. |
| CAUTION | Indicates a hazardous situation which, if not avoided, could result in minor or moderate injury. |
| NOTICE | Addresses practices not related to personal injury. |

## Safety Symbols

Potential hazards associated with the operation of this equipment will be referenced with hazard symbols which may appear throughout this manual in conjunction with safety notes.

| Symbol | Safety Hazard |
|---|---|
| | Lethal exhaust gas hazards |
| | Explosive fuel hazards |
| | Burn hazards |
| | Rotating parts/crush hazards |
| | Pressurized fluid hazards |
| | Hydraulic fluid hazards |

# General Safety

**NEVER** operate this equipment without proper protective clothing, shatterproof glasses, respiratory protection, hearing protection, steel-toed boots and other protective devices required by the job or city and state regulations.
Avoid wearing jewelry or loose fitting clothes that may snag on the controls or moving parts as this can cause serious injury.

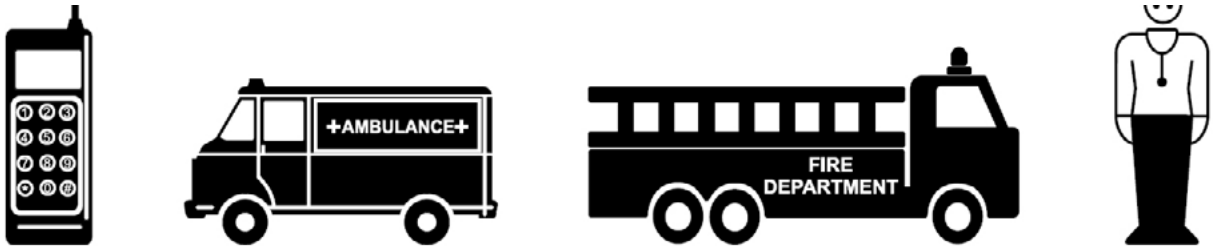


**NEVER** operate this equipment when not feeling well due to fatigue, illness or when under medication.

**NEVER** operate this equipment under the influence of drugs or alcohol.

**ALWAYS** clear the work area of any debris, tools, etc. that would constitute a hazard while the equipment is in operation.

**ALWAYS** wear adequate hearing protection while running your powered screed.

**DO NOT** use the equipment for any purpose other than its intended purposes or applications.

This equipment should only be operated by trained and qualified personnel 18 years of age and older.

Whenever necessary, replace serial plate, operation and safety decals when they become difficult to read. Manufacturer does not assume responsibility for any accident due to equipment modifications.
Unauthorized equipment modifications will void all warranties.

**NEVER** use accessories or attachments that are not recommended by AEC for this equipment.
Damage to the equipment and/or injury to operator may result.

**ALWAYS** know the location of the nearest fire extinguisher.

**ALWAYS** know the location of the nearest first aid kit.

**ALWAYS** know the location of the nearest phone or keep a phone on the job site. Also, know the phone numbers of the nearest ambulance, doctor and fi re department. This information will be invaluable in the case of an emergency.

**EMERGENCY**

**DANGER**

Engine fuel exhaust gases contain poisonous carbon monoxide. This gas is colorless and odorless, and can cause death if inhaled.

The engine of this equipment requires an adequate free flow of cooling air. Never operate this equipment in any enclosed or narrow area where free flow of the air is restricted. If the air flow is restricted it will cause injury to people and property and serious damage to the equipment or engine.

**NEVER** operate the equipment in an explosive atmosphere or near combustible materials. An explosion or fire could result causing severe bodily harm or even death.

**WARNING**

If applicable, never use your hand to find hydraulic leaks. Use a piece of wood or cardboard. Hydraulic fluid injected into the skin must be treated by a knowledgeable physician immediately or severe injury or death can occur.

**ALWAYS** keep clear of rotating or moving parts while operating the screed.

**NEVER** disconnect any emergency or safety devices. These devices are intended for operator safety.

Disconnection of these devices can cause severe injury, bodily harm or even death.

Disconnection of any of these devices will void all warranties.

**CAUTION**

**NEVER** allow passengers or riders on the screed during operation.

**NEVER** lubricate components or attempt service on a running machine.

# General Safety, continued

**NOTICE**

**ALWAYS** keep the machine in proper running condition.

Fix damage to machine and replace any broken parts immediately.

**ALWAYS** inspect your screed upon arrival for damage or tampering that can sometimes occur durring shipping. If damage is found, file a claim with your carrier **Immediately**!! Mark freight bill of ladding as “damaged shipping”

**ALWAYS** store equipment properly when it is not being used. Equipment should be stored in a clean, dry location out of the reach of children and unauthorized personnel.

**ENGINE SAFETY**

**WARNING**

**DO NOT** place hands or fingers inside engine compartment when engine is running.

**NEVER** operate the engine with heat shields or guards removed.

Keep fingers, hands hair and clothing away from all moving parts to prevent injury.

**ALWAYS** disconnect spark plugs before servicing engine to prevent accidental start-up.

**DO NOT** remove the engine oil drain plug while the engine is hot. The possibility of hot oil exists which could cause severe scalding.

**CAUTION**

**NEVER** touch the hot exhaust manifold, muffler or cylinder. Allow these parts to cool before servicing equipment.

**ALWAYS** be aware of HOT components on this machine, such as, Hydraulic components.

**NOTICE**

**NEVER** run engine without an air filter or with a dirty air filter. Severe engine damage may occur. Service air filter frequently to prevent engine malfunction.

**NEVER** tamper with the factory settings of the engine or engine governor. Damage to the engine or equipment can result if operating in speed ranges above the maximum allowable.

**FUEL SAFETY**

**DANGER**

**DO NOT** start the engine near spilled fuel or combustible fluids. Fuel is extremely flammable and its vapors can cause an explosion if ignited.

**ALWAYS** refuel in a well-ventilated area, away from sparks and open flames.

**ALWAYS** use extreme caution when working with flammable liquids.

**DO NOT** fill the fuel tank while the engine is running or hot.

**DO NOT** overfill tank, since spilled fuel could ignite if it comes into contact with hot engine parts or sparks from the ignition system.

Store fuel in appropriate containers, in well-ventilated areas and away from sparks and flames.

**NEVER** use fuel as a cleaning agent.

**DO NOT** smoke around or near the equipment. Fire or explosion could result from fuel vapors or if fuel is spilled on a hot engine.

**TRANSPORTATION SAFETY**

**⚠ CAUTION**

**NEVER** allow any person or animal to stand underneath the equipment while lifting.

**NEVER** lift or transport screed with personnel standing on the screed.

Use proper heavy lifting procedures when lifting the screed.

**NOTICE**

Machine can be transported on fl atbed truck of proper weight capacity.

The easiest way to lift the screed is to attach lifting hooks to the screed frame. Lifting hooks should be placed at equal distances from each end of the screed.

# General Safety, continued

A strap or chain can be attached to these hooks, allowing a forklift or crane to lift the screed up onto and off of a slab of concrete. The strap or chain should have a minimum of 2,000 pounds (1,000 kg) lifting capacity and the lifting device must be capable of lifting at least this amount.

**ALWAYS** make sure crane or lifting device has been properly secured to the lifting hooks on the equipment.

**ALWAYS** shutdown engine before transporting.

**NEVER** lift the equipment while the engine is running.

Tighten fuel tank cap securely and close fuel cock to prevent fuel from spilling.

Use adequate lifting cable (wire or rope) of sufficient strength.

**DO NOT** lift machine to unnecessary heights.

**ALWAYS** tie down equipment during transport by securing the equipment with rope.

**TOWING SAFETY**

**⚠ CAUTION**

Check with your local county or state safety towing regulations, in addition to meeting Department of Transportation (DOT) Safety Towing Regulations, before towing your screed.

In order to reduce the possibility of an accident while transporting the screed on public roads, ALWAYS make sure the trailer that supports the screed and the towing vehicle are mechanically sound and in good operating condition.

**ALWAYS** shutdown engine before transporting

Make sure the hitch and coupling of the towing vehicle are rated equal to, or greater than the trailer “gross vehicle weight rating.”

**ALWAYS** inspect the hitch and coupling for wear. **NEVER** tow a trailer with defective hitches, couplings, chains, etc.

Check the tire air pressure on both towing vehicle and trailer. Trailer tires should be inflated to 50 psi cold. Also check the tire tread wear on both vehicles.

**ALWAYS** make sure the trailer is equipped with a safety chain.

**ALWAYS** properly attach trailer's safety chains to towing vehicle.

**ALWAYS** make sure the vehicle and trailer directional, backup, brake and trailer lights are connected and working properly.

DOT Requirements include the following:
- Connect and test electric brake operation.
- Secure portable power cables in cable tray with tie wraps.

The maximum speed for highway towing is 55 MPH unless posted otherwise. Recommended off-road towing is not to exceed 15 MPH or less depending on type of terrain.

Avoid sudden stops and starts. This can cause skidding, or jack-knifing. Smooth, gradual starts and stops will improve towing.

Avoid sharp turns to prevent rolling.

Trailer should be adjusted to a level position at all times when towing.

Raise and lock trailer wheel stand in up position when towing.

Place chock blocks underneath wheel to prevent rolling while parked.

Place support blocks underneath the trailer's bumper to prevent tipping while parked.

Use the trailer's swivel jack to adjust the trailer height to a level position while parked.

**CLEANING SAFETY**

DANGER

**DO NOT** use gasoline, other fuels, or any flammable solvent to clean parts, especially in enclosed areas. Fumes from fuels and solvents can cause serious health problems if you are exposed to them over an extended period of time.

CAUTION

**DO NOT** attempt to clean or service screed while machine is running.

# General Safety, continued

**NOTICE**

When the life cycle of this equipment is over, it is recommended that the screed frame and all other metal parts be sent to a recycling center.

Metal recycling involves the collection of metal from discarded products and its transformation into raw
materials to use in manufacturing a new product.

Recyclers and manufacturers alike promote the process of recycling metal. Using a metal recycling center promotes energy cost savings.

**NOTICE**

The gasoline engine used in this equipment has been designed to reduce harmful levels of carbon monoxide (CO), hydrocarbons (HC) and nitrogen oxides (NOx) contained in diesel exhaust emissions.

This engine has been certified to meet US EPA Evaporative emissions requirements in the installed configuration. Attempting to modify or make adjustments to the engine emission system by unauthorized personnel without proper training could damage the equipment or create an unsafe condition.

Additionally, modifying the fuel system may adversely affect evaporative emissions, resulting in fines or other penalties.

## ENVIRONMENTAL SAFETY

Decommissioning is a controlled process used to safely retire a piece of equipment that is no longer serviceable. If the equipment poses an unacceptable and unrepairable safety risk due to wear or
damage or is no longer cost effective to maintain (beyond life-cycle reliability) and is to be
decommissioned (demolition and dismantlement), be sure to follow rules below.

**DO NOT** pour waste or oil directly onto the ground, down a drain or into any water source.

Contact your country's Department of Public Works or recycling agency in your area and arrange for proper disposal of any electrical components, waste or oil associated with this equipment.

## Sound & Vibration Analysis

| AVERAGE EQUIVALENT SOUND PRESSURE LEVEL | SOUND PRESSURE LEVEL AT OPERATOR'S EAR | EQUIVALENT SOUND POWER LEVEL |
|---|---|---|
| 110 dB(A) | 106dB(A) | 126dB(A) |

The information above was acquired through vibration and sound analysis taken here at AEC. A certified sound and vibration technician was hired to test several of our products. All of the data collected was measured according to OSHA standards ISO 3744. If there are any questions on this particular subject, contact AEC Customer Service at 870-236-7751 o4 800-643-0095.

# Notes

# SECTION 2: OPERATIONS

# Pre-Operation Instructions

Before starting the engine powered screed, there are a few items that need to be looked over.

- Make sure that bolts are secure and will not vibrate loose.
- Check jam nuts on top pipe to ensure that they are tight against the top pipe coupler.
- Check the hydraulic level in the tank for the hydraulic winches (if applicable).
- Check winch cables to make sure that they will not loosen during the screed run.
- Look over the forms to check for unevenness so that the screed will not hang up.

Ask yourselves these questions when preparing your screed for a job.

- What is the “exact” pour width?
- What is the slump?
- Is the slab flat, crowned, or inverted?
- What is the required surface tolerance?
- Choose screed type and size based on the above information.
- Are any accessories required?
- Do the winches work properly?

Operating your engine powered screed correctly will affect the outcome of the pour. Follow the instructions below to operate your screed correctly and you will be very pleased with your equipment.

**THE JOB SITE:**

**FORMS**

- Are they Stable?
- Will they support the weight of the screed?
- Have the form pins been driven below the top of the forms?
- Can the screed pass from form to form without getting caught?

**COLUMNS & WALLS**

- Screed size is important.
- How will they support the weight of the screed?
- Consider the use of HD winches & 6” extension handles.
- What do you do when you are up against a wall?
  a) wall bracket b) pipe rail c)form

**CONCRETE**

- Are there any mix characteristics or additives that effect the performance of the screed?
- Will the supply of concrete be steady or intermittent?

Be aware of the importance of WEATHER!

**THE CREW**

- Two key people should be trained to operate the scree.
- The screed is a finishing machine, there is a technique to its operation. The TRAVEL SPEED, the VIBRATORY FREQUENCY, and the FEEDING of the screed must all be controlled.
- Knowing how the winches operate before you start is essential.
- To what do you hook the cables.
- Tools and spare parts should be on the job.

# Lifting Procedures

The following procedures describe proper lifting techniques for screed. There is no OSHA standard weight limit for manual lifting. Therefore, rather than stating a regulated limit, they ask that employers or contractors do the following:

A) identify each hazard to which a person at the work place (job site) is likely to be exposed to.
B) Assess the risk of injury or harm to a person resulting from each hazard.
C) Consider the means by which the risk may be reduced.

**NOTE: Never lift more than what you personally feel that you can handle.**

**The lifting handles at each end of the screed are not intended to be used as the only source of lift the screed. It is quite obvious that two large men will not be able to lift 70 feet of screed. The following list of maximum screed lengths is very important so that the length of your screed will not be too long.**

- **SE12 MAXIMUM, 65 FEET**

For proper lifting of an average screed (30 ft.), the screed lifting hook is an ideal item to use. This instrument should be placed at equal distances from each end. A special lifting bridle is then used by a forklift, crane, front-end loader, etc. to raise and transport the screed. Also available from Allen Engineering is thee screed cart. This item is used to move the screed around on the job site only.

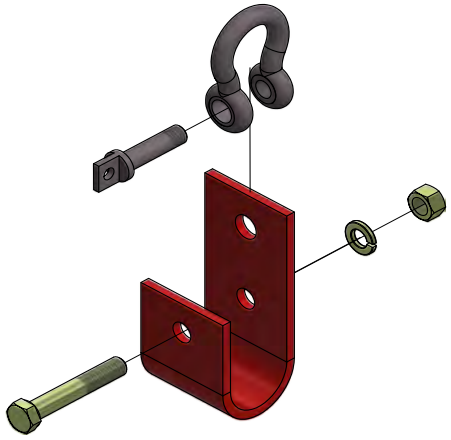

**LIFTING HOOK**
**PART #532000**

**STANDARD SCREED CART**
**MAXIMUM 500 lbs. - 543000**

**HEAVY DUTY SCREED CART**
**MAXIMUM 1,000 lbs. - 543001**

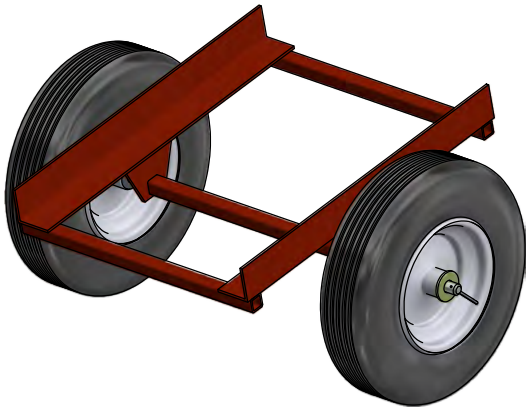

The following figures describe the proper instructions for correctly assembling engine driven screed. Make sure you follow the instructions in order. If the assembling of your screed is not done in this order, there could be some problems in trying to maintain floor flatness because your screed is not level. Levelness of your screed is critical!

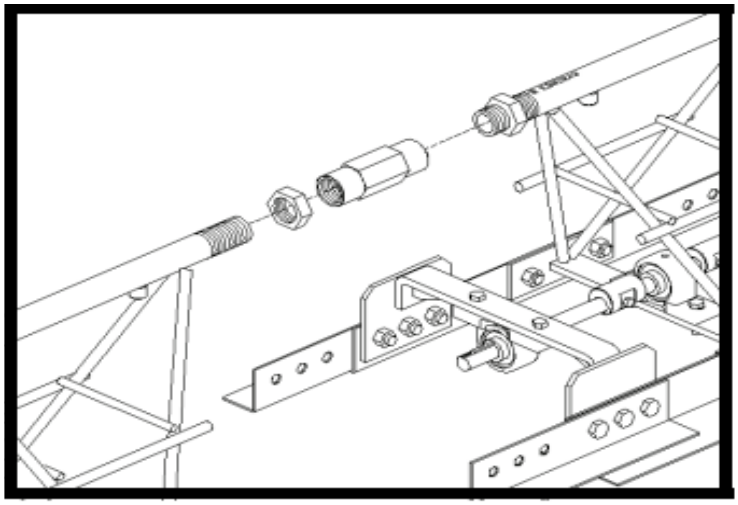

**STEP 1:** Screw jam nuts onto top pipe. Start the top pipe coupler onto the top pipe of the mating truss section. Only thread the coupler on about three turns
**NOTE:** The right and left hand jam nuts will already be installed on the screed section.
TIGHTEN JAM NUTS AFTER SCREED IS LEVEL

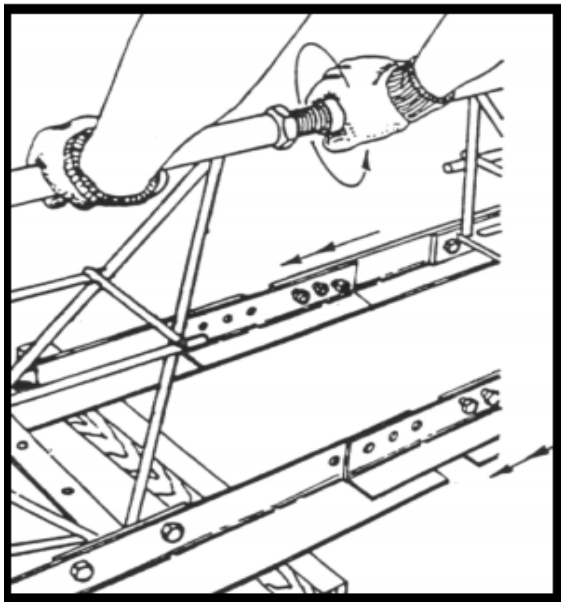

**STEP 2:** Slide screed sections together until top pipe threads on screed marked “R” line up with threads in coupler on the screed. Start coupler on adjoining threads by hand to prevent cross threading.

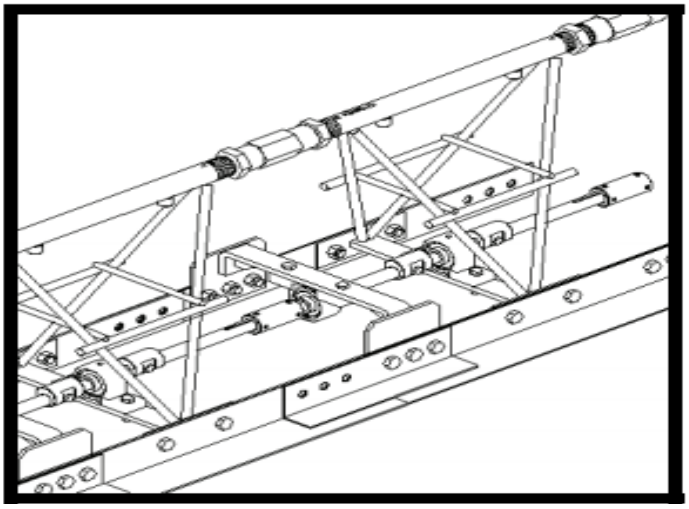

**STEP 3:** Bearing support bolts should be loose so that splice plate can move in clearance holes. With 15” adjustable wrench, turn top pipe coupler until screed an bull float blades contact, then back the coupler off slightly so that the blades touch without tension.

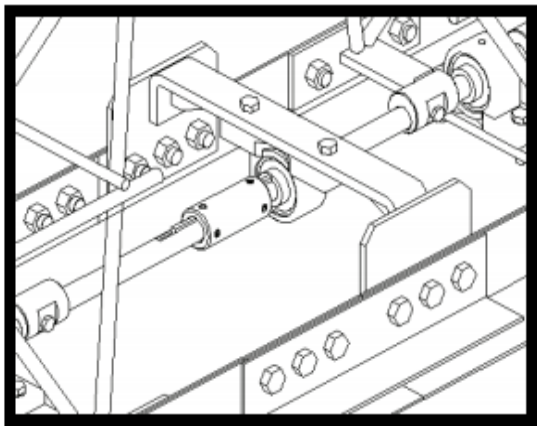

**STEP 4:** Tighten bolts on splice plates. Next slide the shaft coupler on the adjoining section and tighten the set screws provided. make sure that the 3/16 key is on the shaft before sliding sections together. Repeat these steps for attaching all engine driven screed sections.

# Attaching Winches to Form Stakes

The figure below illustrates the proper way to attach the winch cables to the form stake. This is the only way that the cables should e attached. IF the cables are not attached properly, the cables could snap loose causing severe injury to finishing personnel surrounding the screed.

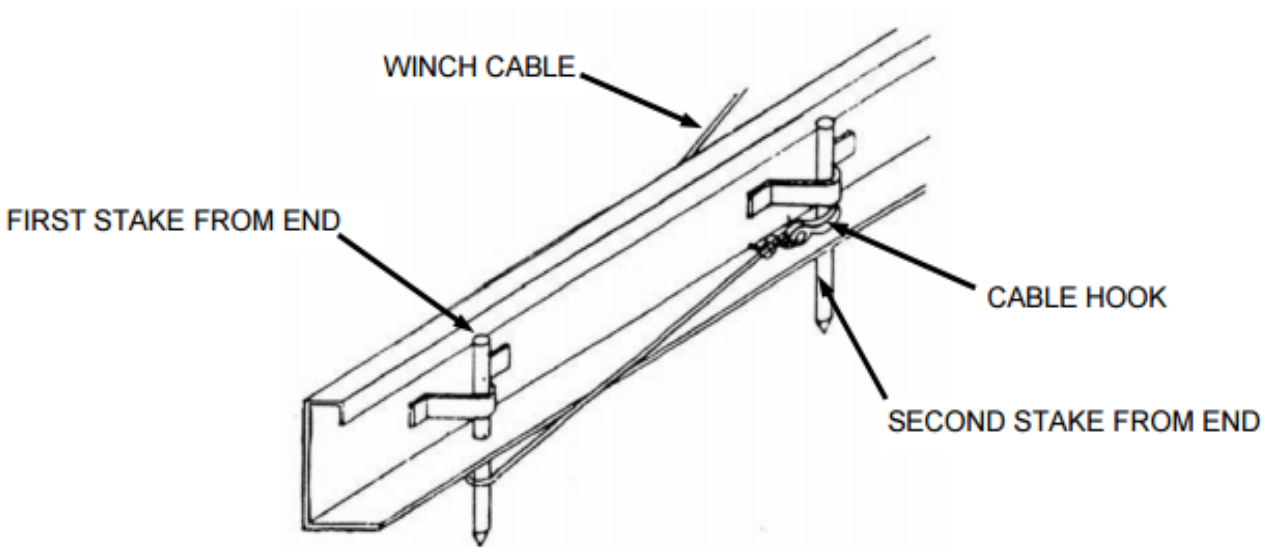


To attach the winch cables properly, adhere to the following instructions.

- Take the cable and go around the last form stake. Make sure that you go underneath the form.
- Attach the cable hook to the next form stake from the end.

# Determining Left and Right of Screed Section

The following illustration shows all the key information on how to determine the left and right and the front and rear of a screed section.

Note the circle with the serial number.
this is probably the easiest way to determine the left and right sides of the screed assembly. The right side has the model number and the 5 digit serial number. The left hand side is only stamped with an “L”. Also the from of the screed is determined by the two screed blades mounted back-to-back. The rear of the screed has only one bull-float blade.

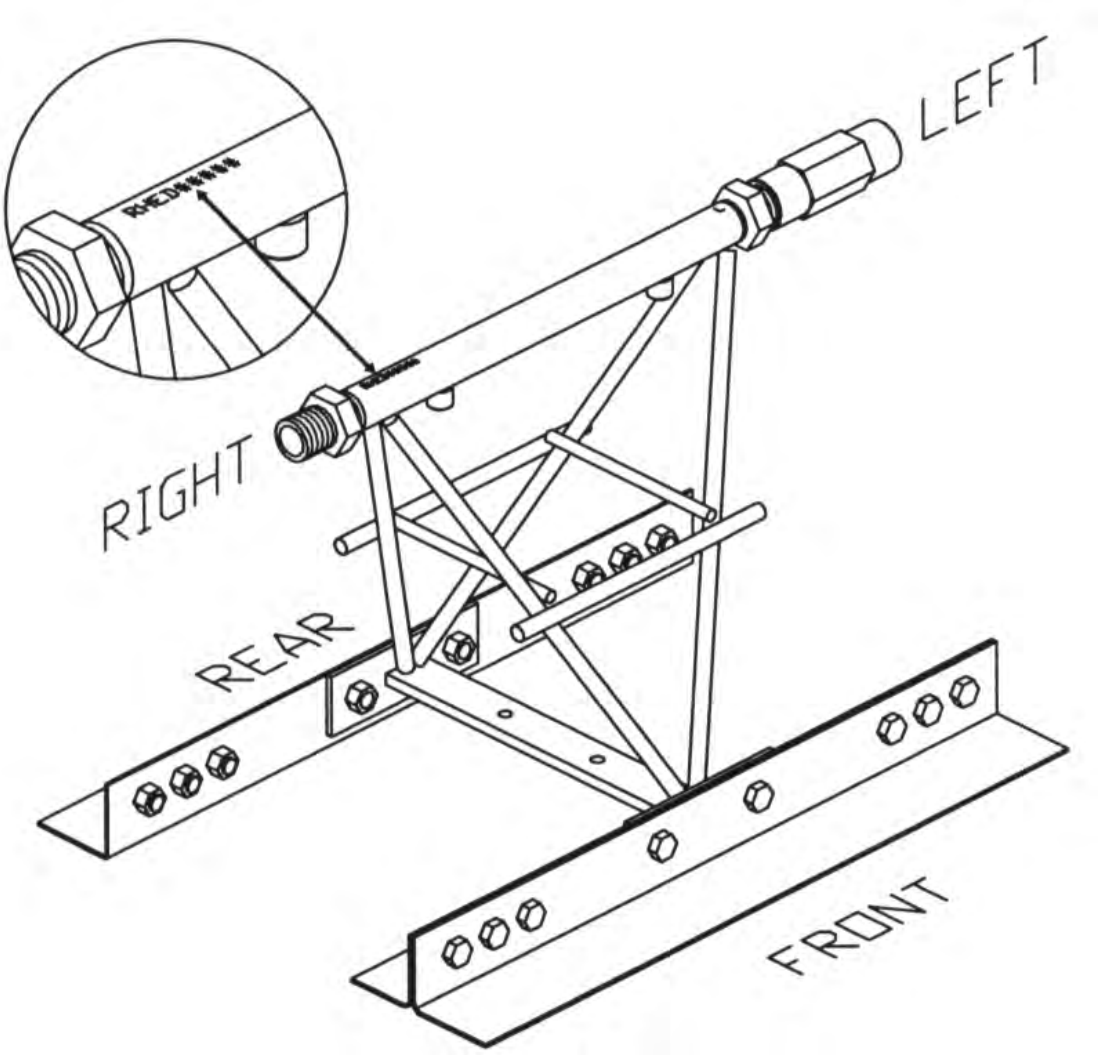

# End Handle Assembly

The following figure shows the proper way to mount a standard end handle to the screed section. Do not try to modify this mounting procedure, this is the only way to  mount the end handles where they will work properly.

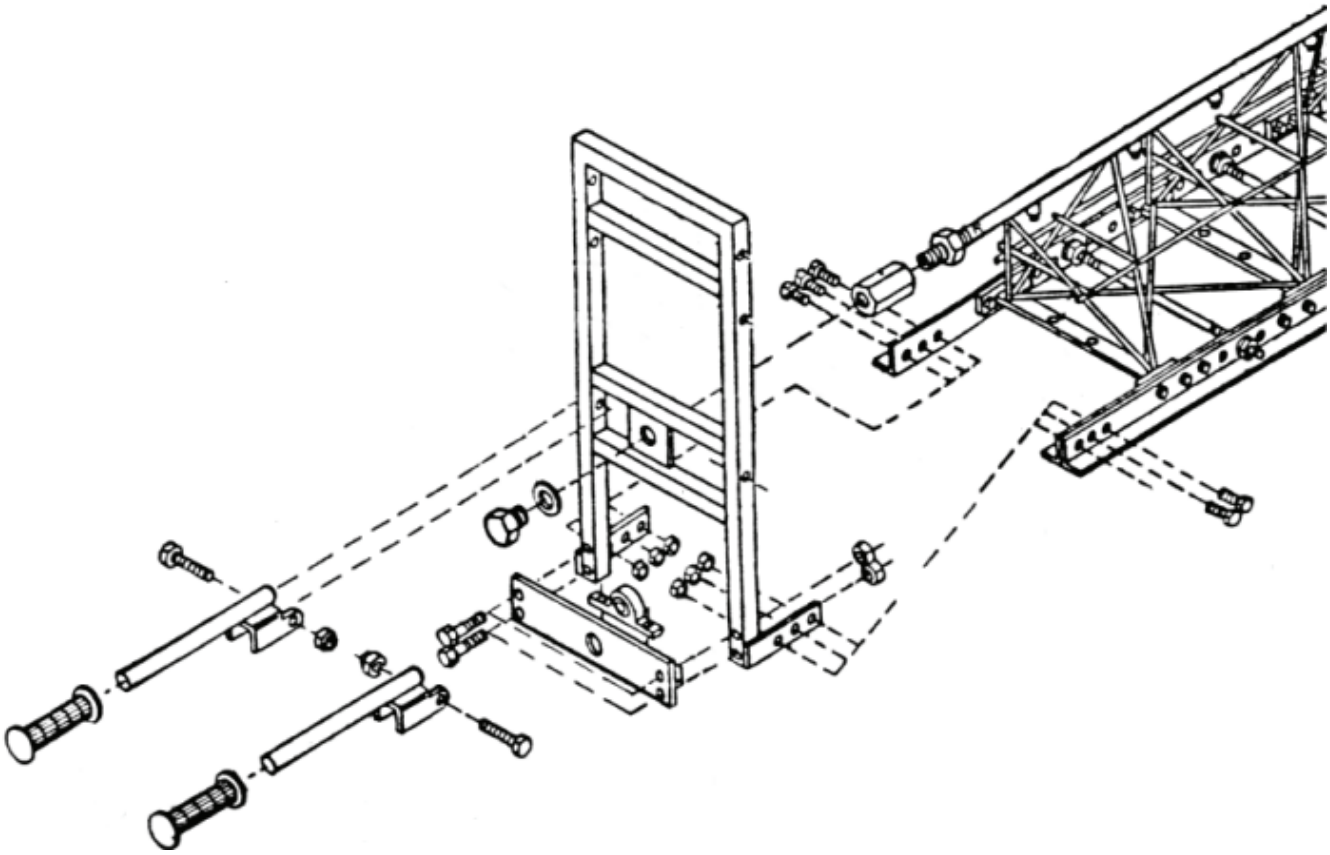

Follow the steps below to properly mount the end handles to your screed.

- Mount the bearing onto the bearing support bracket.
- Mount the handle grips onto the lifting handles.
- Mount the lifting handles onto the end handle using two 3/8 x 2 bolts and 3/8 nylon lock nuts.
- Mount the bearing support bracket to the end handle using four 1/4 x 1 1/2 bolts and 1/4 stover nuts.
- Mount the end handle to the screed using three 1/2 x 3/4 bolts, three 1/2 x 1 bolts and six 1/2 hex nuts. Screw the appropriate adapter for the end you are working on onto the top pipe.

# Engine Mount Assembly

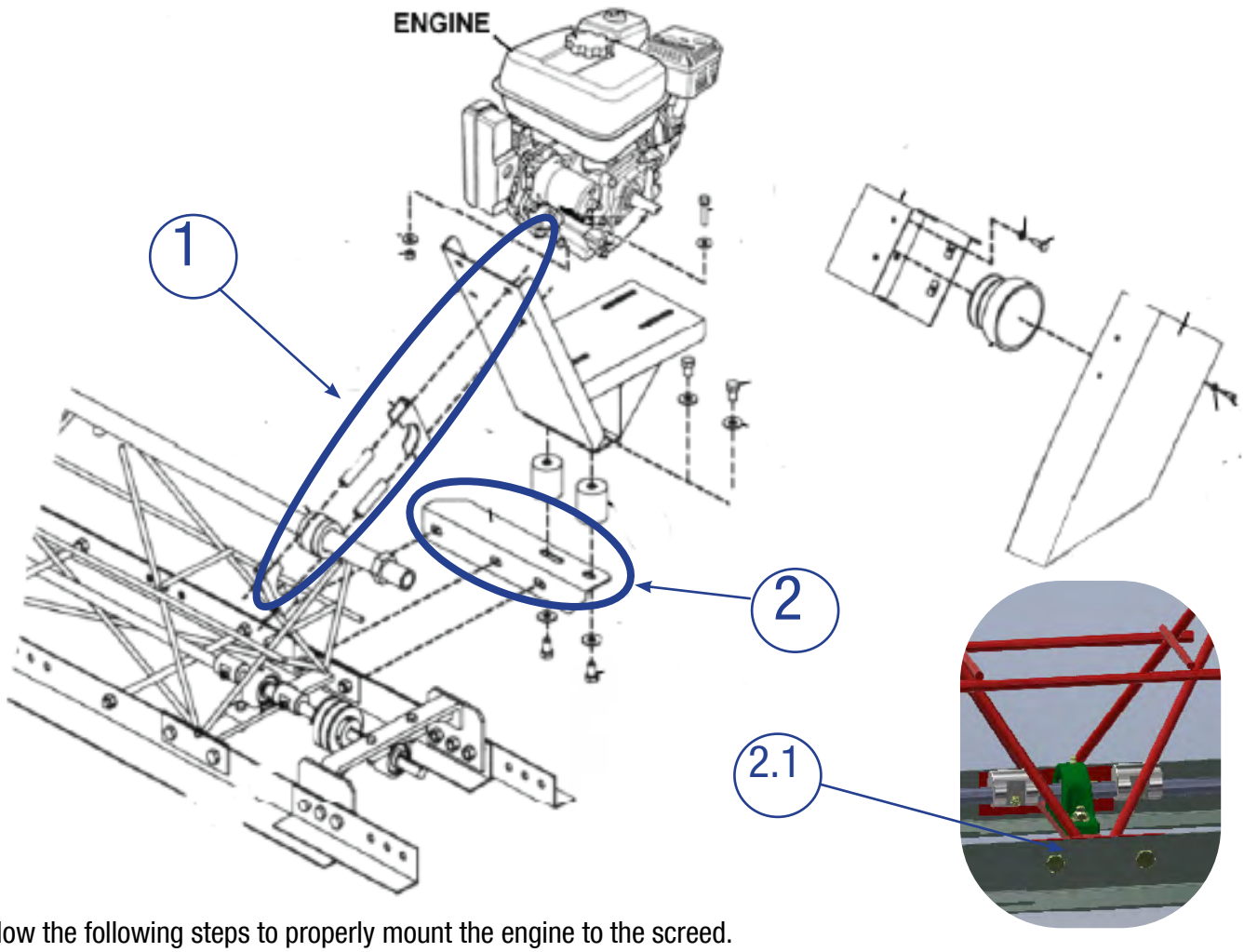


Follow the following steps to properly mount the engine to the screed.

- Firstly insure that the Engine itself is on the rear side of the screed.
- Make sure to attach the v-belt and pulley to the drive shaft.

## 1

- Start by attaching the rubber bushing to the top bar of the screed.
- Proceed to place the clamp and clamp spacer around the bushing.
- Tighten the engine mount onto the screed with the 4 3/8-16 x 3 3/4” hex screws, 3/8” washer, and 3/8” hex nut.

## 2

- Line the engine up with the holes shown in the figure at 2.1.
- Tighten the 1/2-13 x 1” hex screw, 1/2” washer, and 1/2-13” hex nut to the screed.

# String Lining

**To string line your screed, there are a few important steps that need to be followed.**

- Place screed ends on a 2 x 6 or other wooden type support.
- At approximately 1” out from the leading edge of the screed blade, drive a nail into the wooden support. NOTE: Nail should be on the outside of the wooden support.
- Stretch a line as tight as possible from nail to nail. Make sure that the nail is contacting each support at the pint of blade contact.
- NOTE: The supports do not have to be on the same level.
- Use a short, flat piece of metal or wood as a gauge block to compare the string to the bottom surface of the screed blade and bull-float blade.
- The blades should be equal to each other at each splice. If they are not even, loosen jam nuts and tighten top pipe coupler as described on page 33.

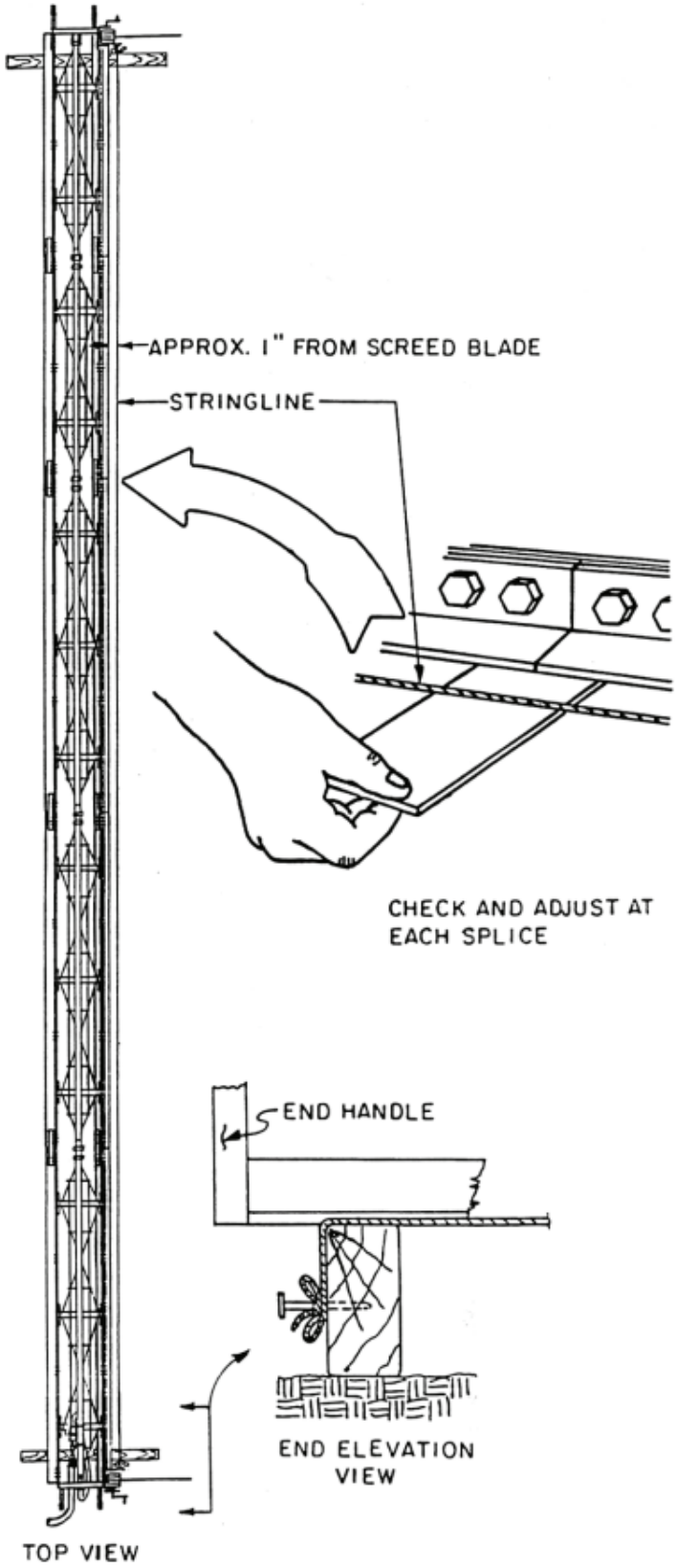

# SECTION 3: SERVICE

# Periodic Maintenance Schedule

The following list contains information regarding the maintenance and operations procedures that must be adhered to improve the life of your machine. A well maintained piece of machinery will provide you years of satisfaction.

- Use Loctite anti-seize MIL A 907D to lubricate the top pipe coupler threads before assembly.
- Oil winch bushings at 10 hr. operation intervals. Use light lubricating oil.
- CAUTION! Change worn or frayed cables - cables under tension may snap and cause severe injury. Use proper methods illustrated in this manual to properly attach cables. ALWAYS connect cables properly - wrap cable under last form pin then connect cable hook to the next form pin towards the screed.
- DO NOT hook cables to a stake driven into the ground, the stake can tilt and allow cable under tension to snap back and cause severe injury.
- CAUTION! For Screeds over 75ft. in length consult the factory.
- ALWAYS make sure that the drive shaft is aligned properly. To make sure that you do this correctly you will need to utilize AEC tool part number 020255.
- When connecting drive shafts, assemble with all the weights on each section facing the bull-float blade. if weights are mis-matched, the screed will no vibrate properly. Match the key-ways on the drive shafts and the connectors.
- Do not over speed, engine RPM must not exceed 3600 RPM. Shaft speed will not exceed design limits if engine speed maximum is adhered to.
- DO NOT crown or invert without universal joints or flex couplers on the shaft connectors.
- Maintain engine in accordance with the manufacturer's instructions.
- Grease screed bearings at 40 hr. operation intervals. Use one stroke of a hand grease gun. Use SHell Alvonia #21, Texaco L-15, Chevron SR1. Clean fittings before greasing. For low temperatures, use Dow Molykote BR-2. DO NOT OVER GREASE.
- For cold weather operations, use bearing lubricant Allen BR-2. This grease flows at amients of -22°F~ thru 356°F.
- CAUTION! When installing pillow block bearings, be sure that the bottom flat surface does not have nicks or deep marks. this can cause the bearing to ride off of the mounted surface; when vibration occurs this small deformation can wear off quickly, allowing the bearing to loosen. With the bearing loose on its mounting, failure can occur.

## Periodic Maintenance Schedule

The table below list basic engine maintenance. Refer to OEM engine manufacturer's Operation Manual for additional information on engine maintenance. A copy of the engine operator's manual was supplied with the machine when it was shipped.

**TABLE**
CHECK LIST

| ITEM | DAILY | EVERY 20 HRS | EVERY 50 HRS | EVERY 100 HRS | EVERY 300 HRS |
|---|---|---|---|---|---|
| Check engine oil level | ✓ | | | | |
| Check & tighten external hardware | ✓ | | | | |
| Check drive belt for wear | | ✓ | | | |
| Check valve clearance | | | | | ✓ |
| Change engine oil | | | | ✓ | |
| Replace engine oil filter | | | | ✓ | |
| Replace spark plug | | | | | ✓ |

## Machine Cleaning Procedure

When cleaning the machine, please adhere to the following information to ensure proper cleaning and to keep the machine in the best condition possible.

**Power Washing Procedure:**

**NOTICE**

- Ensure that the water pressure is below 2000 PSI (14 MPa)
- Always keep the water temperature below 180°F (80°C)
- Use a spray nozzle with at minimum 40° wide spray angle
- Keep the nozzle at least 1 foot (300mm) away from the machine
- Avoid spraying water on the engine and electronic components. Examples include electronic displays, lights, switches, wiring, etc. The electronic components may be damaged if water is sprayed on them.
- Keep a perpendicular angle (90°) when cleaning over a decal.
  - Holding nozzle of a pressure washer at an angle different from 90° may lift the decal from the machine.
- Recommended using a safe cement dissolver, **BACK-SET** or similar**,** to remove hardened concrete.
- It is **NOT** recommended to use chemicals such as:
  - Muriatic Acid
  - Hydrochloric Acid
  - Hydrofluoric Acid
  - Sulfuric Acid
  - Phosphoric Acid
- To prevent build-up of concrete on the machine, use **BODY GUARD** or similar protection wax.

**Filter Cleaning Procedure:**

- Remove air filters and blow out with compressed air, **NOT** to exceed 80 PSI.

# SECTION 4: PARTS

# Factory Service Information

This section contains the illustrated drawings and parts list for help in identifying and/or ordering replacement parts for your machine. Follow the instructions in the front section of this manual “Ordering Parts” when ordering replacement parts to insure prompt and accurate delivery.

**NOTE**

All set screws have blue (LOC-TITE™) applied at the factory. If set screw is removed or loosened for any reason re-apply blue (LOC-TITE™).

**NOTE**

All grease fittings are capped with CAP PLUG GC-5 (AEC PN 015692) to protect the fitting. If cap becomes missing or damaged replace it as soon as possible.

**NOTE**

Anti-Seize is applied at the factory to drive line couplings, and moving components. If these parts are disassembled re-apply a light coat of a graphite based anti-seize.

# Replacement Part Procedure

We recommend AEC quality replacement parts, available from the AEC Customer Service Department or your nearest AEC Dealer.

Part numbers are subject to change without notice. Part numbers might be different outside of the United States of America. Use part numbers listed in the applicable parts list table when you place your order. If a part number changes, the AEC Customer Service Department or your nearest AEC dealer will have the latest part number for the replacement part.

Remember when you order replacement parts, you will need your model number and serial number. These are the numbers that you have recorded in the UNIT ID section of this manual. Please order replacement parts by the appropriate part number, not the key number.

This manual contains an illustrated parts list for help in ordering replacement parts for your machine. Follow the instructions below when ordering parts to insure prompt and accurate delivery:

1. All orders for service parts - include the serial number for the machine. Shipment will be delayed if this information is not available.

2. Include correct description and part number from the “PARTS” Section 4.

3. Specify exact shipping instructions, including the preferred routing and complete destination address.

4. DO NOT return parts to AEC without receiving written authorization from AEC. All authorized returns must be shipped pre-paid.

5. When placing an order, please contact the AEC Dealer nearest you.

**NOTE**

All information, specifications, and illustrations in this manual are subject to change without notice and are based on the latest information at the time of publication.

# 4.1 - Engine Mount, Illustration

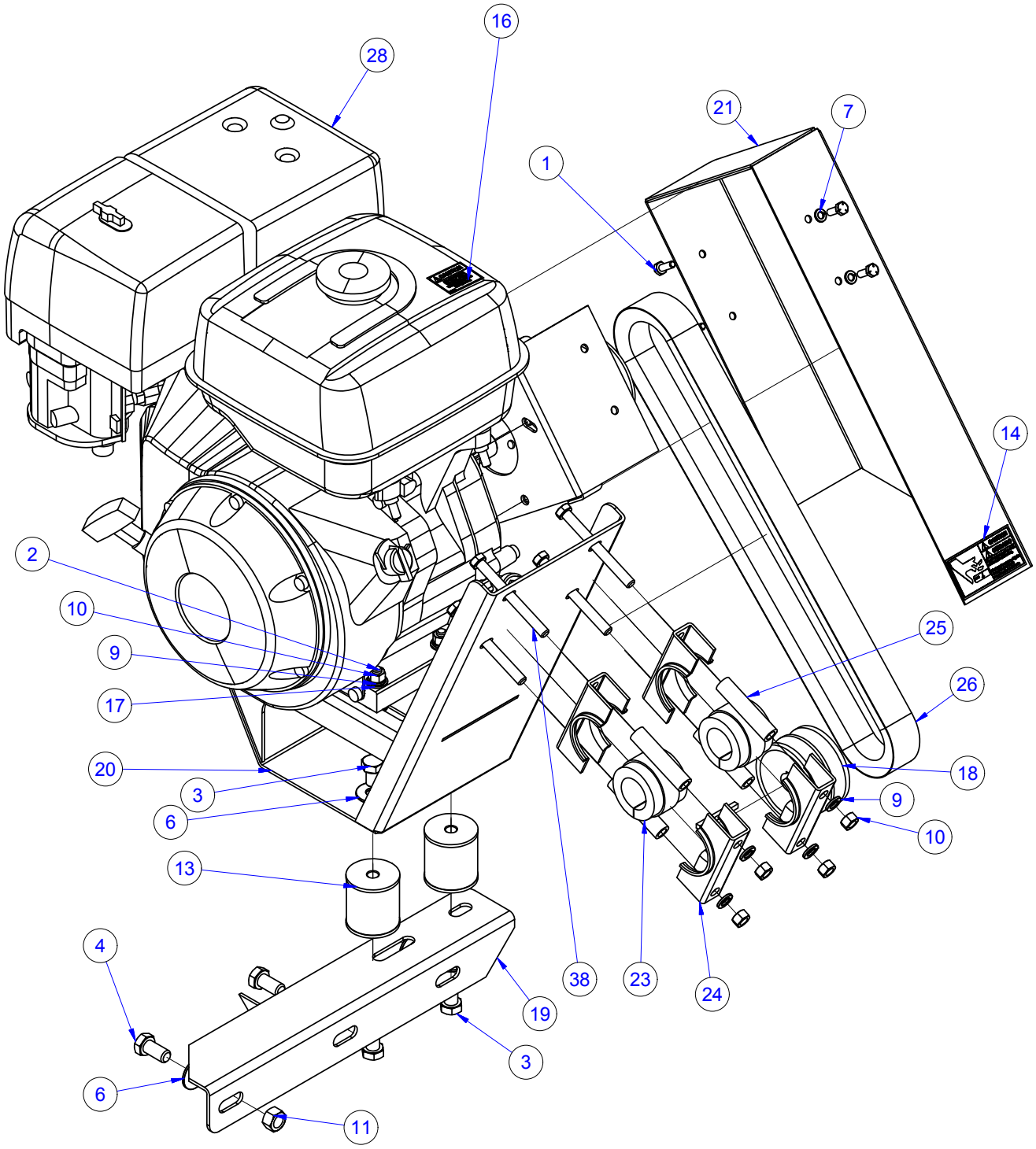

# 4.1 - Engine Mount, Parts List

| ITEM | PART NO. | DESCRIPTION | QTY |
|---|---|---|---|
| - | 027879 | KIT, ENGINE SE12 9HP HONDA | - |
| - | 075815 | KIT, ENGINE SE12 9.5HP KOHLER | - |
| 1 | 010002 | FASTENER, HHCS 1/4-20 X 3/4 | 4 |
| 2 | 010039 | FASTENER, HHCS 3/8-16 X 1 3/4" LONG GR8 | 4 |
| 3 | 010066 | FASTENER, HHCS 1/2-13 X 3/4 GR 5 | 4 |
| 4 | 010067 | FASTENER, HHCS 1/2-13 X 1 GR8 | 3 |
| 5 | 010082 | FASTENER, FLAT WASHER 5/16 | 4 |
| 6 | 010085 | FASTENER, FLAT WASHER 1/2 GR8 | 7 |
| 7 | 010089 | FASTENER, LOCK WASHER 1/4 | 4 |
| 8 | 010090 | FASTENER, LOCK WASHER 5/16 | 4 |
| 9 | 010091 | FASTENER, LOCK WASHER 3/8 | 8 |
| 10 | 010102 | FASTENER, NUT HEX 3/8-16 | 8 |
| 11 | 010106 | FASTENER, NUT HEX 1/2-13 GR8 | 1 |
| 12 | 010273 | KEY, 3/16 SQ X 2 | 1 |
| 13 | 012725 | RUBBER ISOLATOR, 2" WITH 1/2-13 UNC | 2 |
| 14 | 012894 | DECAL,CAUTION KEEP HANDS AWAY(SHAFT) | 1 |
| 15 | 012974 | FASTENER, HHCS 5/16-24 X 3/4 | 4 |
| 16 | 016191 | DECAL, ALLOW ENG TO COOL | 1 |
| 17 | 017751 | FASTENER, FLAT WASHER HARD A325 3/8 (p) | 12 |
| 18 | 020698 | PULLEY, 2BK30X3/4 2 SET SCREWS (p) 9HP | 1 |
| | 022549 | PULLEY, 2BK36 X 3/4 (MODIFIED) (p) 11HP | 1 |
| 19 | 027871 | BRACKET, ANGLE 5/8/11 HP LOPRO | 1 |
| 20 | 027872-T | MOUNT, ENGINE 8/11 HP LOPRO | 1 |
| 21 | 027877 | GUARD, BELT 8/11 HP LOPRO | 1 |
| 22 | 027878 | BRACKET, BELT GUARD LP MOUNT | 1 |
| 23 | 027883 | BUSHING, RUBBER SPLIT | 2 |
| 24 | 027884 | CLAMP, LOPRO ENGINE MOUNT | 4 |
| 25 | 027885 | SPACER, CLAMP LOPRO ENG MT | 4 |
| 26 | 039745 | V-BELT, 2BX - 40 GDY 9 HP | 1 |
| | 039748 | V-BELT, 2BX - 42 GDY 11HP | 1 |
| 27 | 126003 | CLUTCH, 1" BORE 2 GRV NR 1300 | 1 |
| 28 | 042481 | ENGINE, 9 HP HONDA, GX270 | 1 |
| | 018967 | ENGINE, 11 HP HONDA, GX340 | 1 |
| | 070069 | ENGINE, 9.5 HP KOHLER CH395 | 1 |
| 38 | 027882 | FASTENER, HHCS 3/8-16 X 3-3/4 LONG GRADE 8 YELLOW ZINC | 4 |

# 4.2 - 2 Foot Section, Illustration

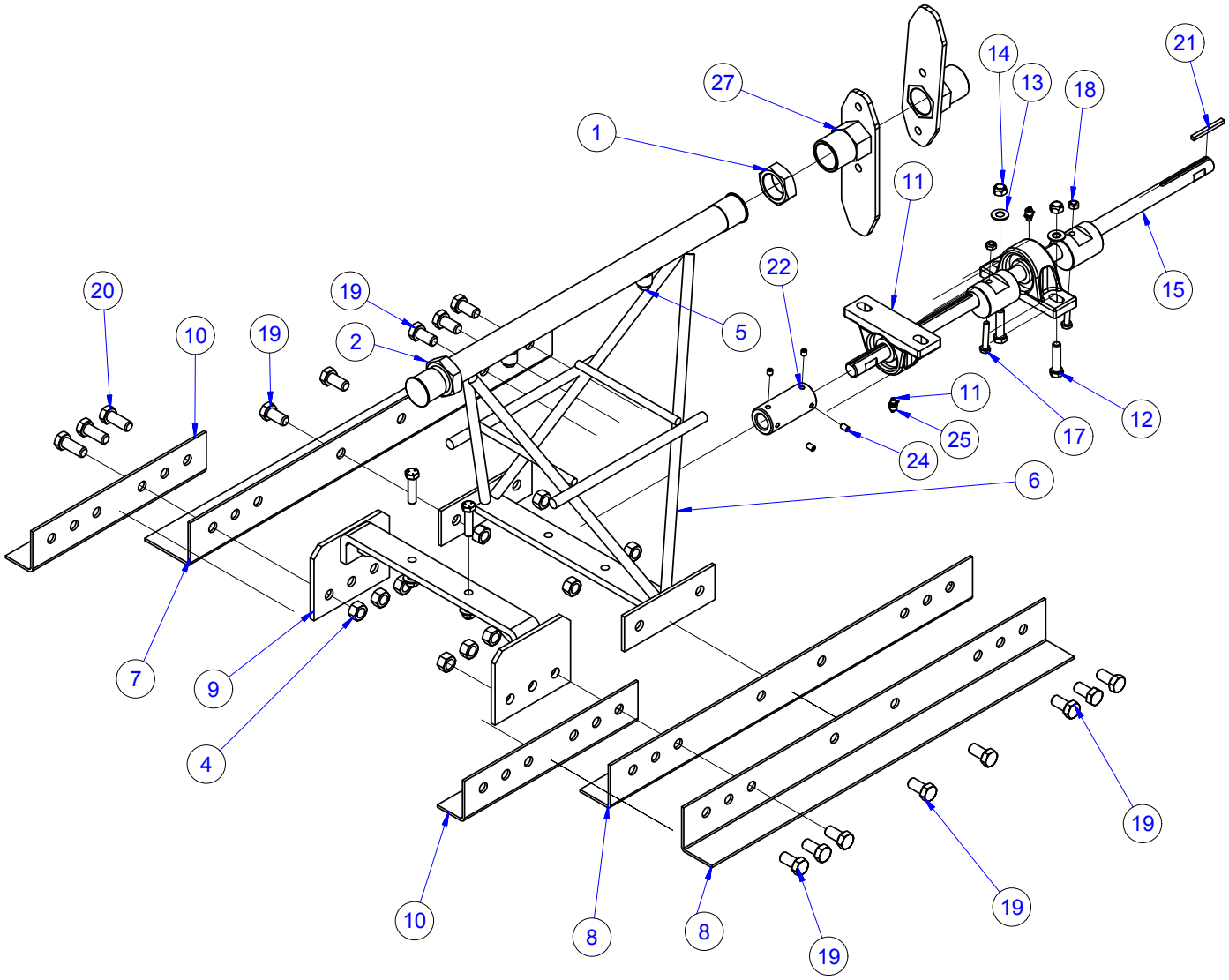

# 4.2 - 2 Foot Section, Parts List

| ITEM | PART NO. | DESCRIPTION | QTY |
|---|---|---|---|
| 1 | 108000 | JAM NUT RH (SX ED) | 1 |
| 2 | 108001 | JAM NUT LH (SX ED) | 1 |
| 3 | 010002 | FASTENER, HHCS 1/4-20 X 3/4 (p) | 6 |
| 4 | 010106 | FASTENER, NUT HEX 1/2-13 | 16 |
| 5 | 012401 | PLUG, 1/4 NPT M. #P-28 PLASTIC | 2 |
| 6 | 016564 | SCREED TRUSS, 2' HED WELDMENT | 1 |
| 7 | 010173 | BLADE, BULL-FLOAT 12HD 2FT (p) | 1 |
| 8 | 010172 | BLADE, SCREED 2' 10GA (p) | 2 |
| 9 | 135000 | SUPPORT, ED INTERMEDIATE BRG | 1 |
| 10 | 106001 | PLATE, SPLICE 10GA | 2 |
| 11 | 020704 | BEARING 3/4" PB (p) | 2 |
| 12 | 028402 | FASTENER, HHCS 3/8-16 X 1-1/2 GR 8 | 4 |
| 13 | 017751 | FASTENER, FLAT WASHER HARD A325 3/8 (p) | 4 |
| 14 | 020514 | FASTENER, NUT STOVER LOCK 3/8-16 | 4 |
| 15 | 020716 | DRIVE SHAFT | 1 |
| 16 | 029270 | ECCENTRIC WEIGHT, HD AGC SCD | 2 |
| 17 | 010005 | FASTENER, HHCS 1/4-20 X 1-1/2 GR 8 | 2 |
| 18 | 020542 | FASTENER, NUT STOVER LOCK 1/4-20 | 2 |
| 19 | 010067 | FASTENER, HHCS 1/2-13 X 1 GR8 | 11 |
| 20 | 010068 | FASTENER, HHCS 1/2-13 X 1-1/4 GR 5 | 3 |
| 21 | 010273 | KEY, 3/16 SQ X 2 | 2 |
| 22 | 020635 | COUPLER, SHAFT | 1 |
| 23 | 013374 | SCREW, 1/4-28 X 1/4 SFLKG SKT SET | 2 |
| 24 | 018999 | SCREW, 1/4-28 X 3/8 SFLKG SKT SET | 2 |
| 25 | 015692 | CAP, Ø1/4 RED GREASE | 2 |
| 26 | 012899 | CAPLUG, RCL-16 (P) | 2 |
| 27 | 044834 | ASSEMBLY, STEEL TOP PIPE COUPLER | 2 |
| 28 | 039351 | TIE, 15.0 LG BLK STD CABLE [Ø3.000] | 1 |

# 4.3 - 2.5 Foot Section, Illustration

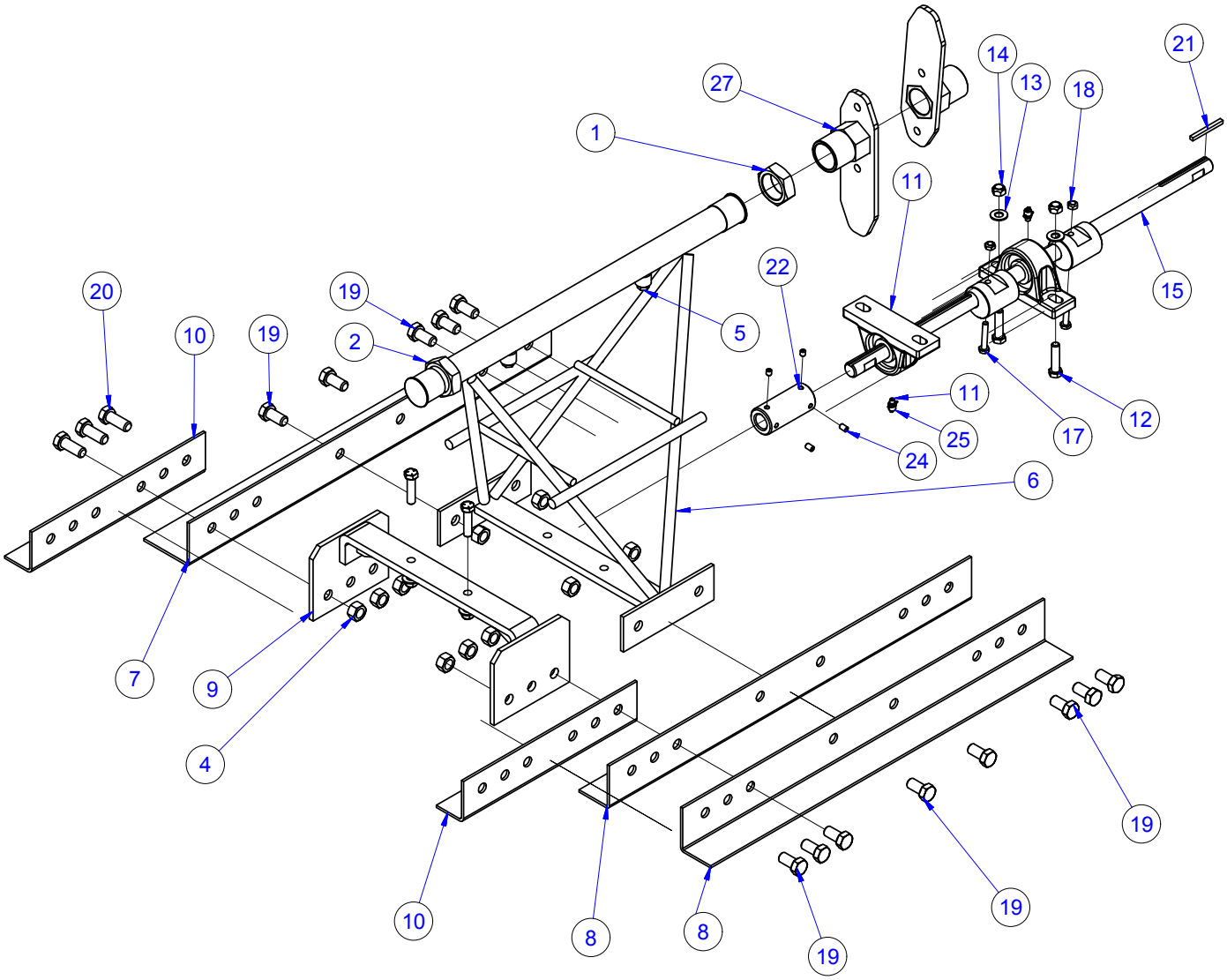

# 4.3 - 2.5 Foot Section, Parts List

| ITEM | PART NO. | DESCRIPTION | QTY |
|---|---|---|---|
| 1 | 108000 | JAM NUT RH (SX ED) | 1 |
| 2 | 108001 | JAM NUT LH (SX ED) | 1 |
| 3 | 010002 | FASTENER, HHCS 1/4-20 X 3/4 (p) | 6 |
| 4 | 010106 | FASTENER, NUT HEX 1/2-13 | 16 |
| 5 | 012401 | PLUG, 1/4 NPT M. #P-28 PLASTIC | 2 |
| 6 | 028700 | SCREED TRUSS, 2.5' HED WELDMENT | 1 |
| 7 | 028702 | BLADE, BULL-FLOAT 12HD 2FT (p) | 1 |
| 8 | 028701 | BLADE, SCREED 2.5' 10GA (p) | 2 |
| 9 | 135000 | SUPPORT, ED INTERMEDIATE BRG | 1 |
| 10 | 106001 | PLATE, SPLICE 10GA | 2 |
| 11 | 020704 | BEARING 3/4" PB (p) | 2 |
| 12 | 028402 | FASTENER, HHCS 3/8-16 X 1-1/2 GR 8 | 4 |
| 13 | 017751 | FASTENER, FLAT WASHER HARD A325 3/8 (p) | 4 |
| 14 | 020514 | FASTENER, NUT STOVER LOCK 3/8-16 | 4 |
| 15 | 028626 | DRIVE SHAFT | 1 |
| 16 | 029270 | ECCENTRIC WEIGHT, HD AGC SCD | 2 |
| 17 | 010005 | FASTENER, HHCS 1/4-20 X 1-1/2 GR 8 | 2 |
| 18 | 020542 | FASTENER, NUT STOVER LOCK 1/4-20 | 2 |
| 19 | 010067 | FASTENER, HHCS 1/2-13 X 1 GR8 | 11 |
| 20 | 010068 | FASTENER, HHCS 1/2-13 X 1-1/4 GR 5 | 3 |
| 21 | 010273 | KEY, 3/16 SQ X 2 | 2 |
| 22 | 020635 | COUPLER, SHAFT | 1 |
| 23 | 013374 | SCREW, 1/4-28 X 1/4 SFLKG SKT SET | 2 |
| 24 | 018999 | SCREW, 1/4-28 X 3/8 SFLKG SKT SET | 2 |
| 25 | 015692 | CAP, Ø1/4 RED GREASE | 2 |
| 26 | 012899 | CAPLUG, RCL-16 (P) | 2 |
| 27 | 044834 | ASSEMBLY, STEEL TOP PIPE COUPLER | 2 |
| 28 | 039351 | TIE, 15.0 LG BLK STD CABLE [Ø3.000] | 1 |

# 4.4 - 5 Foot Section, Illustration

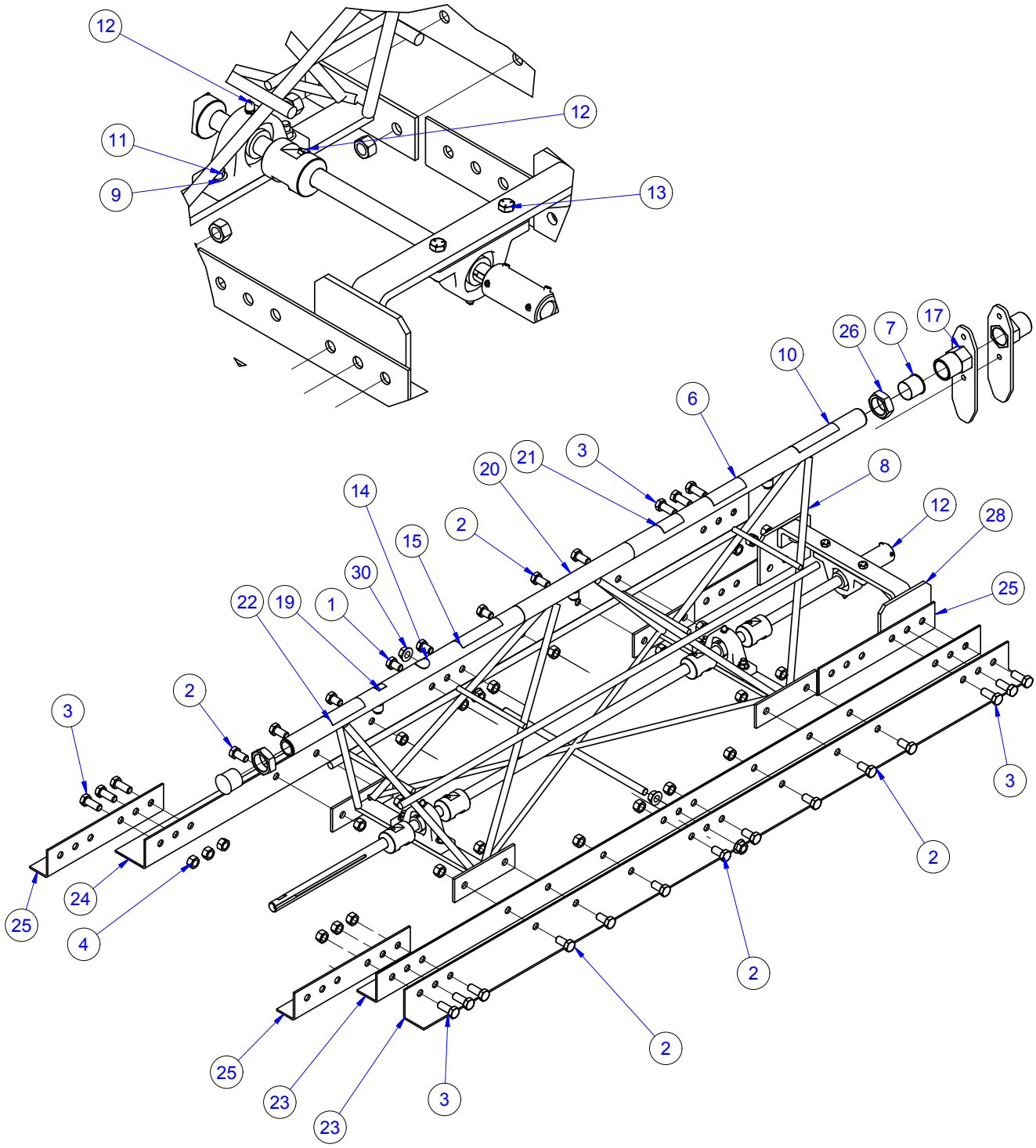

# 4.4 - 5 Foot Section, Parts List

| ITEM | PART NO. | DESCRIPTION | QTY |
|---|---|---|---|
| 1 | 010066 | FASTENER, HHCS 1/2-13 X 3/4 GR 5 | 4 |
| 2 | 010067 | FASTENER, HHCS 1/2-13 X 1 GR8 | 12 |
| 3 | 010068 | FASTENER, HHCS 1/2-13 X 1-1/4 GR 5 | 12 |
| 4 | 010106 | FASTENER, NUT HEX 1/2-13 GR8 | 28 |
| 5 | 012401 | PLUG, 1/4 NPT M. #P-28 PLASTIC | 3 |
| 6 | 012894 | DECAL,CAUTION KEEP HANDS AWAY(SHAFT) | 1 |
| 7 | 012899 | CAPLUG, RCL-16 (P) | 2 |
| 8 | 016565 | SCREED TRUSS, 5' HED WELDMENT (p) | 1 |
| 9 | 017751 | FASTENER, FLAT WASHER HARD A325 3/8 (p) | 6 |
| 10 | 020048 | DECAL, DO NOT CROWN W/O UJOINT | 1 |
| 11 | 020514 | FASTENER, NUT STOVER LOCK 3/8-16 (p) | 6 |
| 12 | 022190 | SHAFT ASS'Y,5' STD HED | 1 |
| 13 | 028402 | FASTENER, HHCS 3/8-16 X 1-1/2 GR 8 | 6 |
| 14 | 036669 | DECAL, HEARING PROTECTION (1") | 1 |
| 15 | 037501 | DECAL, MODEL 12 HED | 1 |
| 16 | 038400 | COUPLER, STEEL SCREED LH TOP PIPE | 1 |
| 17 | 044834 | ASSEMBLY, STEEL TOP PIPE COUPLER | 1 |
| 18 | 039351 | TIE, 15.0 LG BLK STD CABLE [Ø3.000] | 1 |
| 19 | 039893 | DECAL, CE | 1 |
| 20 | 049413 | DECAL, RAZORBACK TRUSS SCREED | 1 |
| 21 | 053446 | DECAL, MADE IN USA (SP) | 1 |
| 22 | 056336 | DECAL AEC 1.5" X 3.25" WHITE/RED | 1 |
| 23 | 103001 | BLADE, SCREED 5' 10GA | 2 |
| 24 | 105001 | BLADE, BULLFLOAT 5' 10GA | 1 |
| 25 | 106001 | PLATE, SPLICE 10GA | 4 |
| 26 | 108000 | JAM NUT RH (SX ED) | 1 |
| 27 | 108001 | JAM NUT LH (SX ED) | 1 |
| 28 | 135000 | SUPPORT, ED INTERMEDIATE BRG | 1 |
| 29 | 136000 | ROD, STABILIZER 1/2-13 x 14" ZINC | 1 |
| 30 | 1909790 | NUT WHIZ 1/2-13NC ZP | 4 |

# 4.5 - 7.5 Foot Section, Illustration

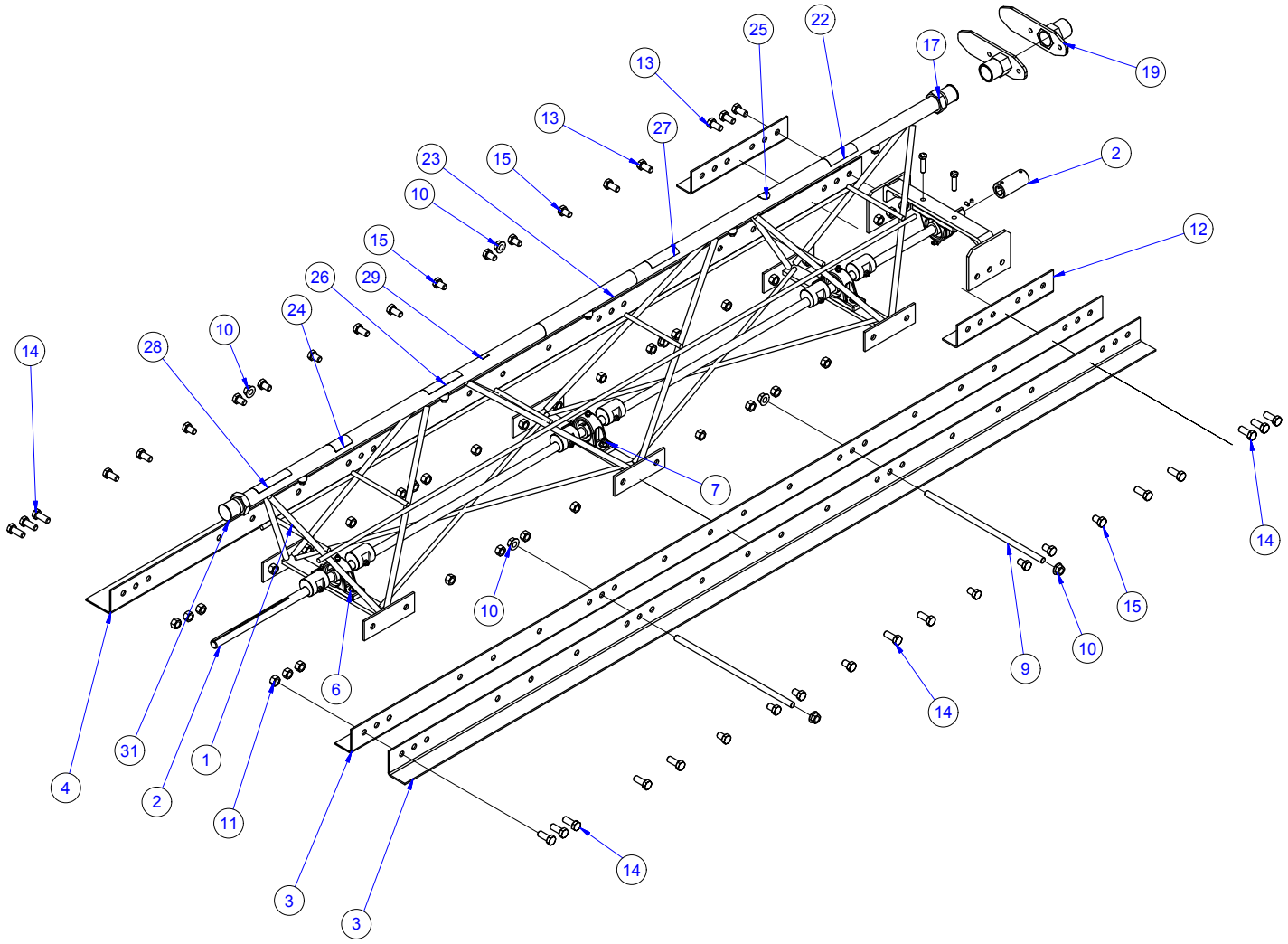

# 4.5 - 7.5 Foot Section, Parts List

| ITEM | PART NO. | DESCRIPTION | QTY |
|---|---|---|---|
| 1 | 016566 | SCREED TRUSS, 7 1/2'HED WELDMENT | 1 |
| 2 | 022189 | SHAFT ASS'Y,7 1/2' STD HED SCR. (p) | 1 |
| 3 | 102001 | BLADE, SCREED 7 1/2’ 10GA | 2 |
| 4 | 104001 | BLADE, BULL-FLOAT 7 1/2' 10GA | 1 |
| 5 | 135000 | SUPPORT, ED INTERMEDIATE BRG | 1 |
| 6 | 017751 | FASTENER, FLAT WASHER HARD A325 3/8 (p) | 8 |
| 7 | 020514 | FASTENER, NUT STOVER LOCK 3/8-16 | 10 |
| 8 | 028402 | FASTENER, HHCS 3/8-16 X 1-1/2 GR 8 | 8 |
| 9 | 136000 | ROD, STABILIZER 1/2-13 x 14" ZINC | 2 |
| 10 | 1909790 | NUT WHIZ 1/2-13NC ZP | 8 |
| 11 | 010106 | FASTENER, NUT HEX 1/2-13 GR8 | 40 |
| 12 | 106001 | PLATE, SPLICE 10GA | 2 |
| 13 | 010067 | FASTENER, HHCS 1/2-13 X 1 GR8 | 9 |
| 14 | 010068 | FASTENER, HHCS 1/2-13 X 1-1/4 GR 5 | 15 |
| 15 | 010066 | FASTENER, HHCS 1/2-13 X 3/4 GR 5 | 16 |
| 16 | 012401 | PLUG, 1/4 NPT M. #P-28 PLASTIC | 5 |
| 17 | 108000 | JAM NUT RH (SX ED) | 1 |
| 18 | 108001 | JAM NUT LH (SX ED) | 1 |
| 19 | 038401 | COUPLER, STEEL SCREED RH TOP PIPE | 1 |
| 20 | 038400 | COUPLER, STEEL SCREED LH TOP PIPE | 1 |
| 21 | 010036 | FASTENER, HHCS 3/8-16 X 1 | 2 |
| 22 | 012894 | DECAL,CAUTION KEEP HANDS AWAY(SHAFT) | 1 |
| 23 | 049413 | DECAL, RAZORBACK TRUSS SCREED | 1 |
| 24 | 053446 | DECAL, MADE IN USA (SP) | 1 |
| 25 | 036669 | DECAL, HEARING PROTECTION (1") | 1 |
| 26 | 037501 | DECAL, MODEL 12 HED | 1 |
| 27 | 056336 | DECAL AEC 1.5" X 3.25" WHITE/RED | 1 |
| 28 | 020048 | DECAL, DO NOT CROWN W/O U-JOINT | 1 |
| 29 | 039893 | DECAL, CE | 1 |
| 30 | 039351 | TIE, 15.0 LG BLK STD CABLE [Ø3.000] | 1 |
| 31 | 012899 | CAPLUG, RCL-16 (P) | 2 |

# 4.6 - 10 Foot Section, Illustration

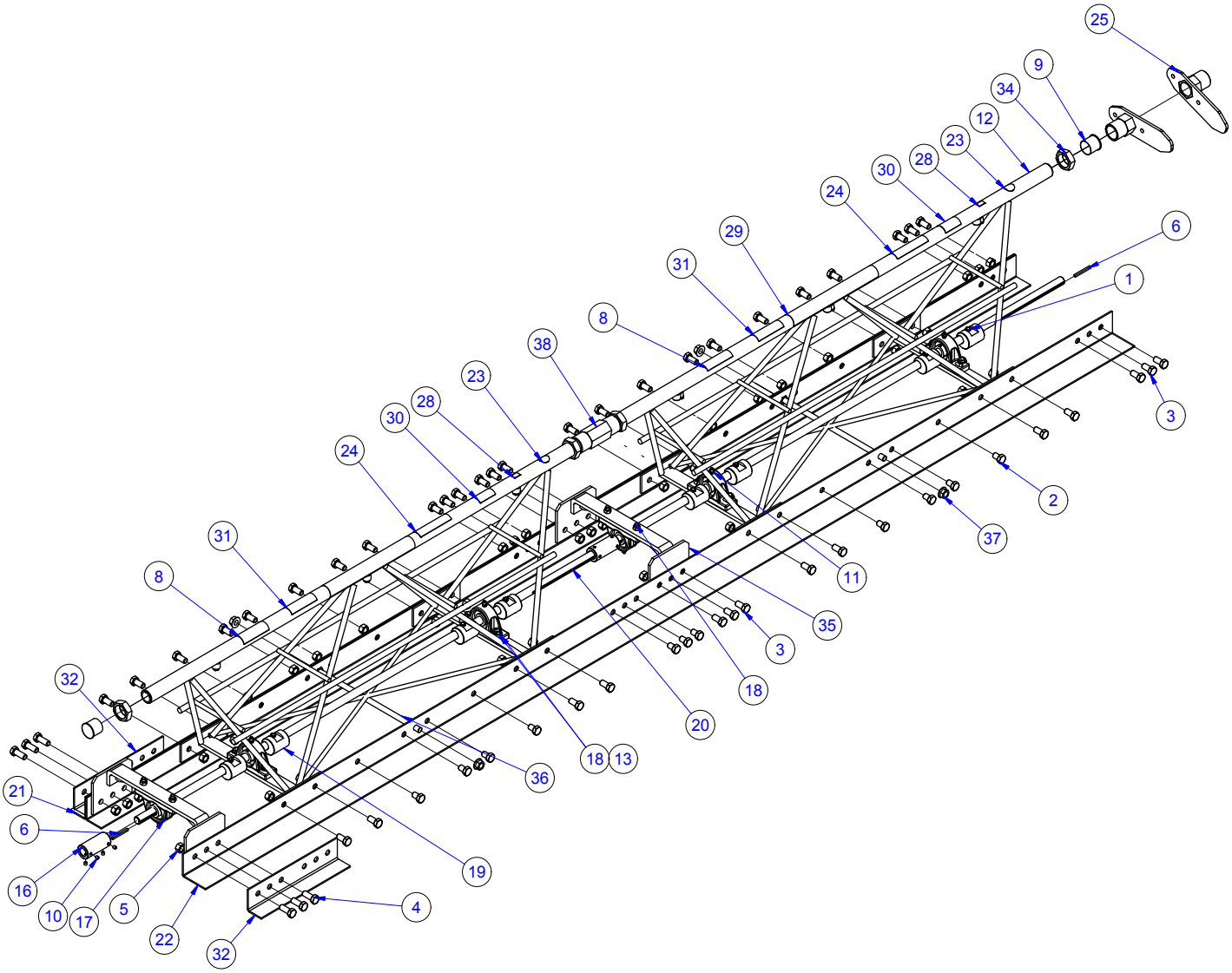

# 4.6 - 10 Foot Section, Parts List

| ITEM | PART NO. | DESCRIPTION | QTY |
|---|---|---|---|
| 1 | 010005 | FASTENER, HHCS 1/4-20 X 1-1/2 GR 8 | 8 |
| 2 | 010066 | FASTENER, HHCS 1/2-13 X 3/4 GR 5 | 11 |
| 3 | 010067 | FASTENER, HHCS 1/2-13 X 1 GR8 | 39 |
| 4 | 010068 | FASTENER, HHCS 1/2-13 X 1-1/4 GR 5 | 6 |
| 5 | 010106 | FASTENER, NUT HEX 1/2-13 GR8 | 56 |
| 6 | 010273 | KEY, 3/16 SQ X 2 | 3 |
| 7 | 012401 | PLUG, 1/4 NPT M. #P-28 PLASTIC | 6 |
| 8 | 012894 | DECAL,CAUTION KEEP HANDS AWAY(SHAFT) | 2 |
| 9 | 012899 | CAPLUG, RCL-16 (P) | 2 |
| 10 | 013374 | SCREW, 1/4-28 X 1/4 SFLKG SKT SET | 8 |
| 11 | 015692 | CAP, Ø1/4 RED GREASE | 6 |
| 12 | 016565 | SCREED TRUSS, 5' HED WELDMENT (p) | 2 |
| 13 | 017751 | FASTENER, FLAT WASHER HARD A325 3/8 (p) | 12 |
| 14 | 020514 | FASTENER, NUT STOVER LOCK 3/8-16 | 12 |
| 15 | 020542 | FASTENER, NUT STOVER LOCK 1/4-20 | 8 |
| 16 | 020635 | COUPLER, SHAFT | 2 |
| 17 | 020704 | BEARING 3/4" PB (p) | 6 |
| 18 | 028402 | FASTENER, HHCS 3/8-16 X 1-1/2 GR 8 | 12 |
| 19 | 029270 | ECCENTRIC WEIGHT, HD AGC SCD | 8 |
| 20 | 032112 | SHAFT, DRIVE ED SCREED 5'10"KW | 2 |
| 21 | 032138 | BLADE, SCREED HED | 2 |
| 22 | 032139 | BLADE, BULL-FLOAT HED | 1 |
| 23 | 036669 | DECAL, HEARING PROTECTION (1") | 2 |
| 24 | 037501 | DECAL, MODEL 12 HED | 2 |
| 25 | 044834 | ASSEMBLY, STEEL TOP PIPE COUPLER | 3 |
| 26 | 038401 | COUPLER, STEEL SCREED RH TOP PIPE | 1 |
| 27 | 039351 | TIE, 15.0 LG BLK STD CABLE [Ø3.000] | 1 |
| 28 | 039893 | DECAL, CE | 2 |
| 29 | 049413 | DECAL, RAZORBACK TRUSS SCREED | 2 |
| 30 | 053446 | DECAL, MADE IN USA (SP) | 2 |
| 31 | 056336 | DECAL AEC 1.5" X 3.25" WHITE/RED | 2 |
| 32 | 106001 | PLATE, SPLICE 10GA | 2 |
| 33 | 108000 | JAM NUT RH (SX ED) | 2 |
| 34 | 108001 | JAM NUT LH (SX ED) | 2 |
| 35 | 135000 | SUPPORT, ED INTERMEDIATE BRG | 2 |
| 36 | 136000 | ROD, STABILIZER 1/2-13 x 14" ZINC | 2 |
| 37 | 1909790 | NUT WHIZ 1/2-13NC ZP | 8 |
| 38 | 107000 | COUPLER, TOP PIPE SX ED | 1 |

# 4.7 - End Handle Assembly, Illustration

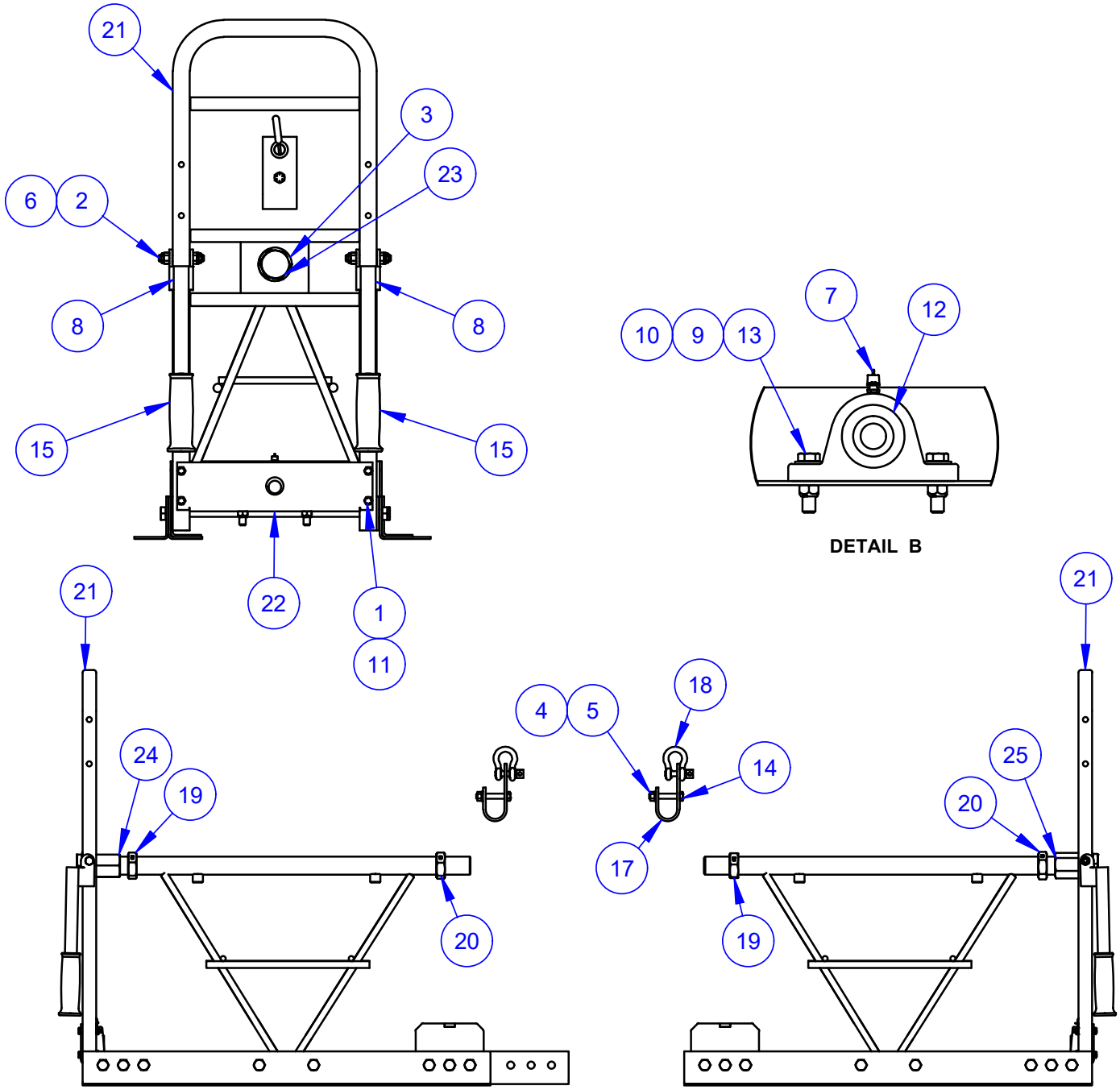


Note: Screed frame and blades shown for reference only.

# 4.7 - End Handle Assembly, Parts List

| ITEM | PART NO. | DESCRIPTION | QTY |
|---|---|---|---|
| 1 | 010005 | FASTENER, HHCS 1/4-20 X 1-1/2 | 8 |
| 2 | 010040 | FASTENER, HHCS 3/8-16 X 2 | 4 |
| 3 | 010088 | FASTENER, FW 1” | 2 |
| 4 | 010091 | FASTENER, LW 3/8 | 2 |
| 5 | 010102 | FASTENER, HEX NUT 3/8-16 | 2 |
| 6 | 010464 | FASTENER, HEX NUT NYLOK 3/8-16 | 4 |
| 7 | 015692 | CAP, Ø1/4 RED GREASE | 2 |
| 8 | 017066 | SCREED LIFTING HANDLE | 4 |
| 9 | 017751 | FASTENER, FW 3/8 | 4 |
| 10 | 020514 | FASTENER, HEX NUT STOVER LOCK 3/8-16 | 4 |
| 11 | 020542 | FASTENER, HEX NUT STOVER LOCK 1/4-20 | 8 |
| 12 | 020704 | BEARING 3/4” PB | 2 |
| 13 | 028402 | FASTENER, HHCS 3/8-16 x 1-1/2 | 4 |
| 14 | 040637 | FASTNER, HHCS 3/8-16 X 2-1/4 | 2 |
| 15 | 048308 | GRIP, HANDLE (7/8”ID) | 4 |
| 16 | 068513 | KIT, DECAL MANUAL WINCH | 1 |
| 17 | 100049 | SCREED LIFT HOOK | 2 |
| 18 | 100050 | SHACKLE 3/8 / SCREW PIN | 2 |
| 19 | 108000 | JAM NUT RH | 2 |
| 20 | 108001 | JAM NUT LH | 2 |
| 21 | 109000 | HANDLE, STANDARD END | 2 |
| 22 | 112000 | BRKT, BEARING SUPPORT | 2 |
| 23 | 113000 | END HANDLE NUT | 2 |
| 24 | 114000 | RH AIR END SX ADAPTOR | 1 |
| 25 | 115000 | LH AIR END SX ADAPTOR | 1 |

# 4.8 - End Handle Manual Winch Assembly, Illustration

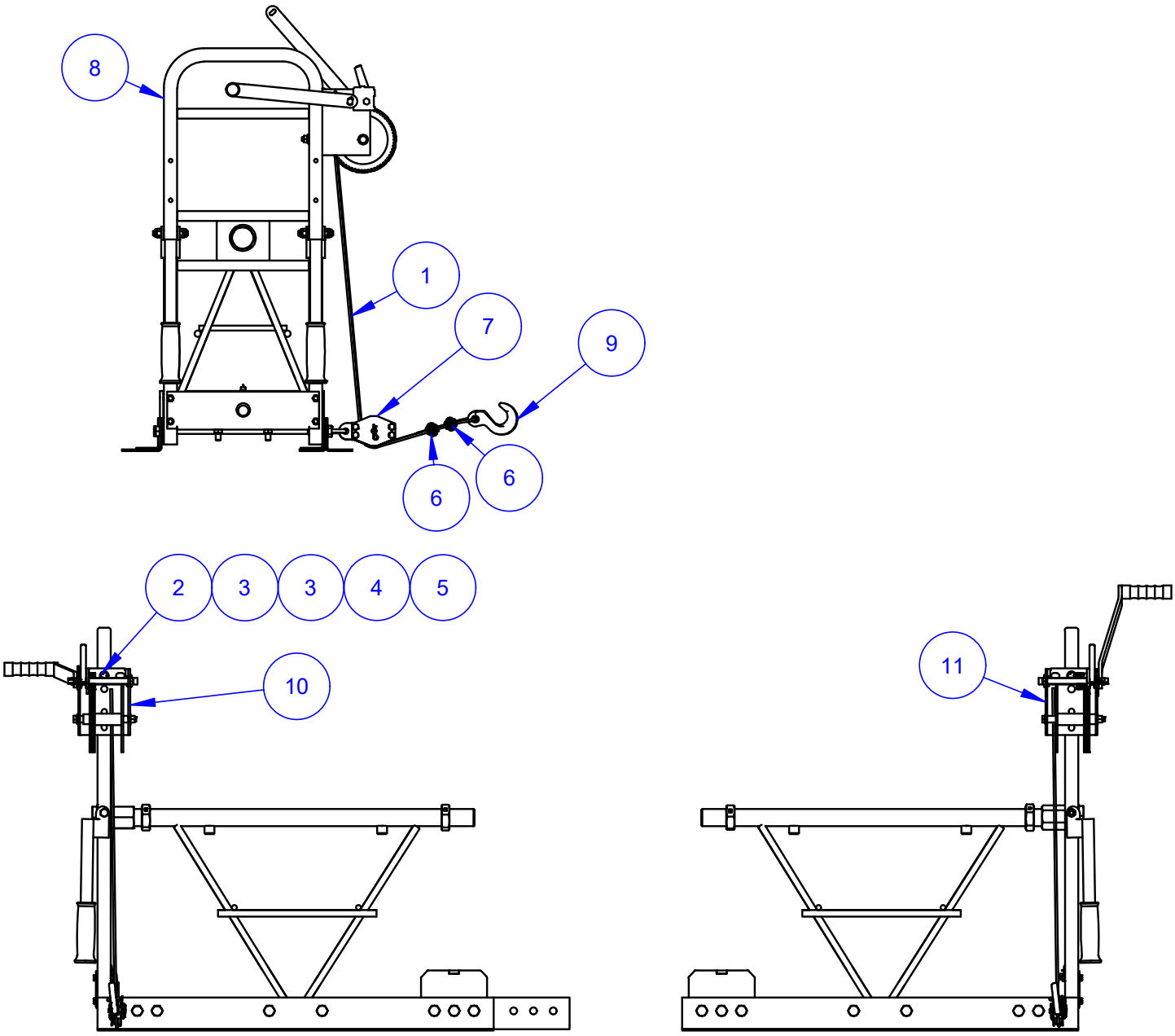


Note: Screed frame and blades shown for reference only.

# 4.8 - End Handle Manual Winch Assembly, Parts List

| ITEM | PART NO. | DESCRIPTION | QTY |
|---|---|---|---|
| - | 018993 | SCREED STEEL AIR-ENG SSA12 WINCH GROUP | 1 |
| - | 018670 | WINCH, LH W/100 FT CABLE | 1 |
| - | 110100 | WINCH, RH DL2500 W/100 FT CABLE | 1 |
| | | | |
| 1 | 000751 | CABLE, 5/32 7 X 19 GALV | * |
| 2 | 010023 | FASTENER, HHCS 5/16-18 X 1-3/4 | 4 |
| 3 | 010082 | FASTENER, FW 5/16 | 8 |
| 4 | 010090 | FASTENER, LW 5/16 | 2 |
| 5 | 010100 | FASTENER, HEX NUT 5/16-18 | 4 |
| 6 | 012391 | FASTENER, CLAMP CABLE 1/8 | 4 |
| 7 | 025992 | PULLEY BLOCK, HD W/EYEBOLT | 2 |
| 8 | 109000 | HANDLE, STANDARD END | 2 |
| 9 | 110008 | HOOK, SLIP 1/4” PLATED BULK | 2 |
| 10 | 110100 | WINCH, RH WITH HANDLE | 1 |
| 11 | 110100L | WINCH, LH WITH HANDLE | 1 |

*100FT of 000751 cable per winch.

Note: 018670 & 110100 comes with all mounting hardware.
Note: 018993 contains 1 each 018670 & 110100.

# 4.9 - Winch Assembly, Illustration

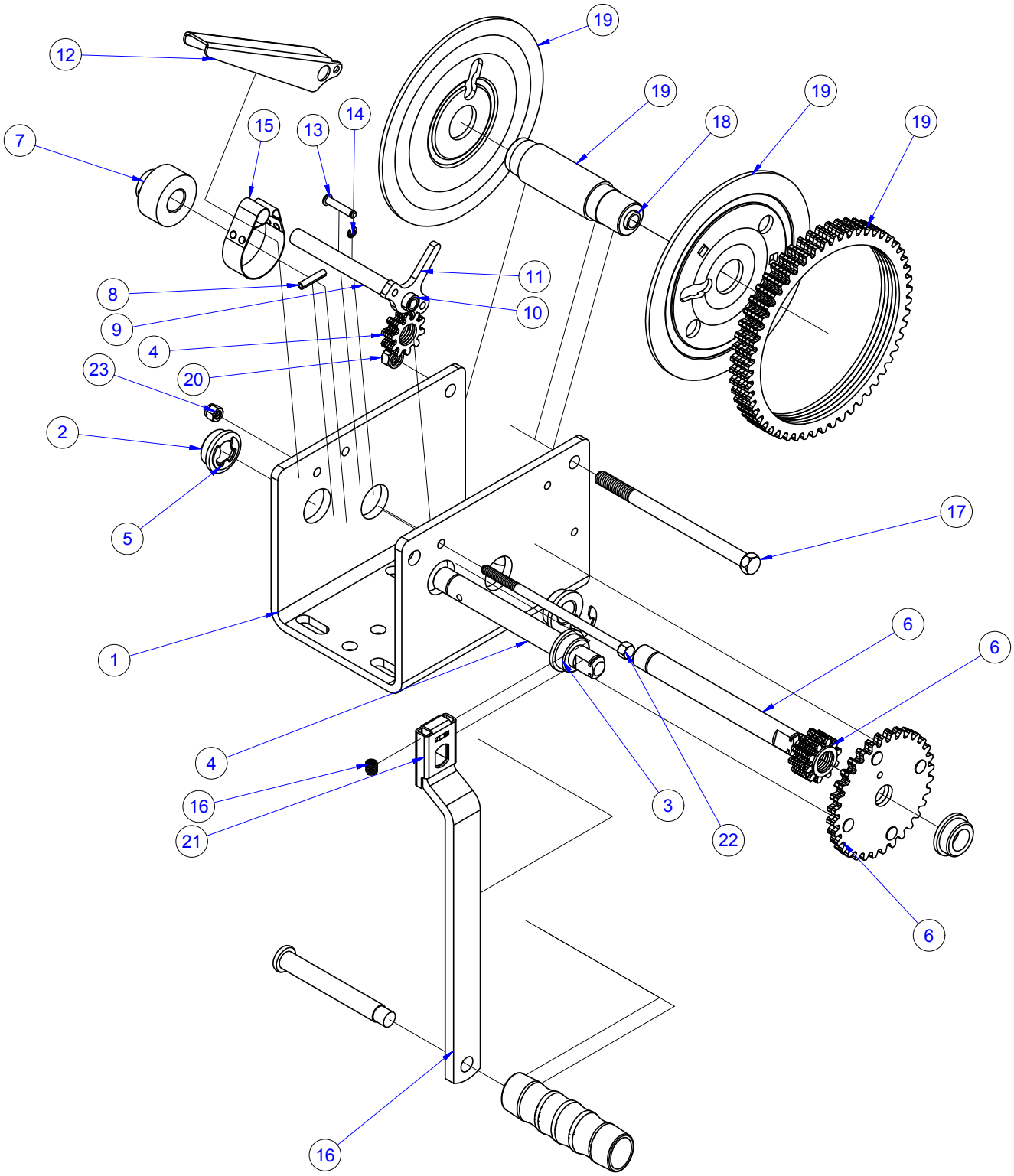

# 4.9 - Winch Assembly, Parts List

| ITEM | PART NO. | DESCRIPTION | QTY |
|---|---|---|---|
| 1 | 404875 | BASE | 1 |
| 2 | 204009 | BUSHING | 2 |
| 3 | 204012 | BUSHING | 2 |
| 4 | 304780 | DRIVE SHAFT ASSEMBLY | 1 |
| 5 | 205116 | E-RING 5 | 2 |
| 6 | 304727 | IDS ASSEMBLY | 1 |
| 7 | 404910 | DRUM | 1 |
| 8 | 207255 | ROLL PIN | 1 |
| 9 | 404878 | SPACER SLEEVE | 1 |
| 10 | 404872 | SHORT SLEEVE | 1 |
| 11 | 404868 | REVERSIBLE SLEEVE | 1 |
| 12 | 404889 | BRAKE LEVER | 1 |
| 13 | 404909 | BRAKE PIN | 1 |
| 14 | 205135 | E-RING | 1 |
| 15 | 404908 | BRAKE BAND | 1 |
| 16 | 304294 | HANDLE ASSEMBLY | 1 |
| 17 | 204804 | CAP SCREW | 1 |
| 18 | 204808 | REEL SPACER | 1 |
| 19 | 304728 | REEL ASSEMBLY | 1 |
| 20 | 204803 | LOCK NUT | 1 |
| 21 | 404180 | HANDLE SPRING | 1 |
| 22 | 205006 | DRIVE SHAFT, 0.25 | 1 |
| 23 | 205014 | LOCK NUT | 1 |

# 4.10 - (OLD) Hydraulic Winch Assembly, Illustration

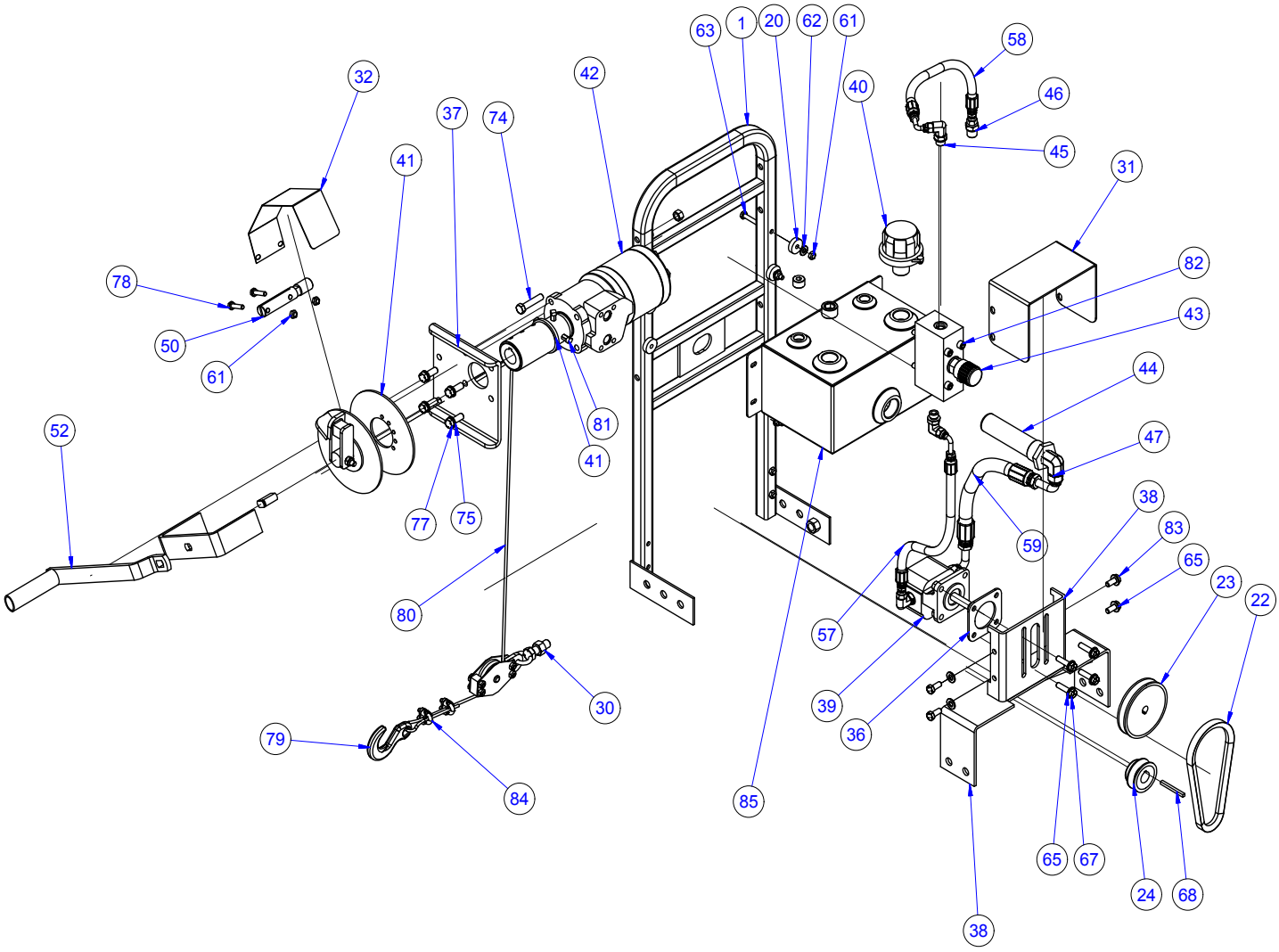

# 4.10 - (OLD) Hydraulic Winch Assembly, Parts List

| ITEM | PART NO. | DESCRIPTION | QTY |
|---|---|---|---|
| 1 | 109000 | END HANDLE ASSEMBLY | 1 |
| 20 | 015713 | BUSHING, NITRILE | 4 |
| 21 | 017066 | SCREED LIFTING HANDLE | 2 |
| 22 | 026486 | V-BELT | 1 |
| 23 | 010500 | AK39X1/2 PULLEY | 1 |
| 24 | 011896 | PULLEY 3/4" | 1 |
| 30 | 025992 | PULLEY BLOCK, HD W/EYEBOLT (p) | 1 |
| 31 | 027903 | PUMP COVER | 1 |
| 32 | 029108 | SPRING, F/ HYD WINCH | 1 |
| 36 | 029111 | PLATE | 1 |
| 37 | 029112 | BRACKET, MOTOR RH HYD WINCH | 1 |
| | 029113 | BRACKET, MOTOR LH HYD WINCH | |
| 38 | 029114 | PUMP BRACKET | 1 |
| 39 | 029105 | PUMP, HYDRAULIC | 1 |
| 40 | 010495 | FILLER BREATHER WITH BAFFLE | 1 |
| 41 | 038280 | ASSEMBLY, HYD WINCH REEL | 1 |
| 42 | 034011 | MOTOR, WHITE (255320F3710AAAAA) | 1 |
| 43 | 029107 | VALVE, FLOW CONTROL MCD-5439 | 1 |
| 44 | 034012 | 1 X 1/2 TANK SUCTION STRAINER W/O BTPASS (TMF-05-0) | 1 |
| 45 | 023838 | CNTCTR, 9/16X1/4 STRTTHD ORING (p) | 3 |
| 46 | 027925 | FTG, FL NIPPLE 3/8 X 1/4 37 DG | 1 |
| 47 | 023414 | ELBOW, 1/2”X1/2” 90DEG | 1 |
| 50 | 029109 | ROD, SPRING | 1 |
| 51 | 029270 | ECCENTRIC WEIGHT, HD AGC SCD | 2 |
| 52 | 110102 | HANDLE | 1 |
| 57 | 029398 | HOSE, ASSEMBLY, 19-1/2”, 1/4” DIAMETER | 1 |
| 58 | 029397 | HOSE, ASSEMBLY, 16”, 1/4 DIAMETER | 1 |
| 59 | 029400 | HOSE, **LEFT HAND**, ASSEMBLY, 16”, 1/2” DIAMETER | 1 |
| | 029401 | HOSE, **RIGHT HAND**, ASSEMBLY, 16”, 1/2” DIAMETER | 1 |

# 4.10 - (OLD) Hydraulic Winch Assembly, Parts List

| ITEM | PART NO. | DESCRIPTION | QTY |
|---|---|---|---|
| 60 | 010005 | FASTENER, HHCS 1/4-20 X 1-1/2 GR 8 | 6 |
| 61 | 020542 | FASTENER, NUT STOVER LOCK 1/4-20 | 12 |
| 62 | 010081 | FASTENER, FLAT WASHER 1/4 | 4 |
| 63 | 010007 | FASTENER, HHCS 1/4-20 X 2 | 4 |
| 64 | 010090 | FASTENER, LOCK WASHER 5/16 | 4 |
| 65 | 010082 | FASTENER, FLAT WASHER 5/16 | 8 |
| 66 | 010100 | FASTENER, NUT HEX 5/16-18 | 8 |
| 67 | 010021 | FASTENER, HHCS 5/16-18 X 1-1/4 GR5 | 4 |
| 68 | 010273 | KEY, 3/16 SQ X 2 | 2 |
| 74 | 010039 | FASTENER, HHCS 3/8-16 X 1 3/4” LONG GR8 | 1 |
| 75 | 010091 | FASTENER, LOCK WASHER 3/8 | 6 |
| 76 | 010102 | FASTENER, NUT HEX 3/8-16 | 1 |
| 77 | 010036 | FASTENER, HHCS 3/8-16 X 1 | 4 |
| 78 | 010003 | FASTENER, HHCS 1/4-20 X 1 | 2 |
| 79 | 110008 | HOOK, SLIP 1/4” PLATED BULK | 1 |
| 80 | 000751 | CABLE, 5/32 7 X 19 GALV | 1 |
| 81 | 022297 | FASTENER, SQHSS 5/16-24 X 1 | 3 |
| 82 | SHCS | SHCS, VALVE | 4 |
| 83 | 010019 | FASTENER, HHCS 5/16-18 X 3/4 GR 5 | 4 |
| 84 | 022656 | CABLE CLAMP | 2 |
| 85 | 065666 | TANK, HYDRAULIC | 1 |
| 86 | 035327 | PLUG, 3/4-14 NPTF HOLLOW HEX | 1 |
| 87 | 065669 | PLUG, 3/4-14 NPTF HOLLOW HEX | 1 |

# 4.10 - (OLD) Hydraulic Winch Kit, Parts List

**THESE PARTS ARE KITTED FOR A COMPLETE HYDRAULIC SYSTEM ON THE SCREED. PLEASE REFER TO THE PREVIOUS TABLE FOR ORDERING INDIVIDUAL COMPONENTS WITHIN THIS KIT.**

| KIT, HYDRAULIC WINCH (033696) | | | |
|---|---|---|---|
| **ITEM** | **PART #** | **DESCRIPTION** | **QTY** |
| 1 | 034011 | MOTOR, HYDRAULIC | 2 |
| 2 | 029104 | PUMP, RIGHT HAND | 1 |
| 3 | 029105 | PUMP, LEFT HAND | 1 |
| 4 | 010495 | CAP, BREATHER, HYDRAULIC TANK | 2 |
| 5 | 034012 | STRAINER, SUCTION, 1” X 1/2”, WITHOUT BY-PASS | 2 |
| 6 | 029107 | VALVE, FLOW CONTROL (T-1401) [MCD-5439] | 2 |
| 7 | 045923 | FITTING, ELBOW, 90°, (F6801-4-6-NWO) | 6 |
| 8 | 027925 | FITTING, FL NIPPLE, 3/8” X 1/4” (2404-4-6) | 2 |
| 9 | 023414 | FITTING, ELBOW, 90°, 1/2” X 1/2” (2501-8-8) | 2 |
| 10 | 045921 | FITTING, STRAIGHT, (6400-8-8-0) | 2 |
| 11 | 035564 | PLUG, 1/4”, HEX, HOLLOW PIPE (5406-HHP-4) | 2 |
| 12 | 029400 | HOSE, **LEFT HAND**, ASSEMBLY, 16”, 1/2” DIAMETER (29400-SKD) | 1 |
| 13 | 029401 | HOSE, **RIGHT HAND**, ASSEMBLY, 16”, 1/2” DIAMETER (29401-SKD) | 1 |
| 14 | 029397 | HOSE, ASSEMBLY, 16”, 1/4 DIAMETER (29397-SKD) | 2 |
| 15 | 029398 | HOSE, ASSEMBLY, 19-1/2”, 1/4” DIAMETER (29398-SKD) | 2 |

# 4.11 - (E-STOP) RH Hydraulic Winch Assembly, Illustration

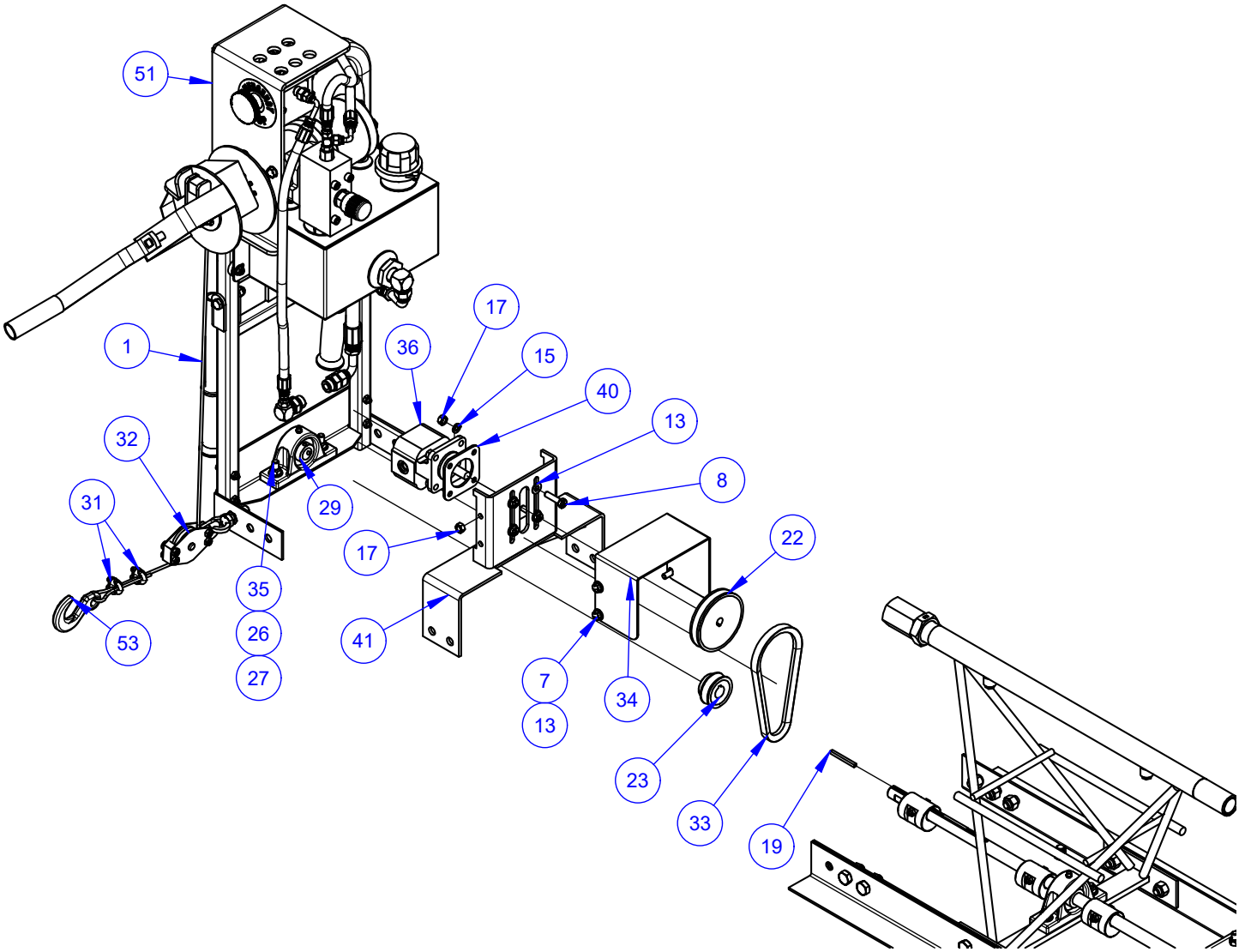

# 4.11 - (E-STOP) RH Hydraulic Winch Assembly, Illustration Continued

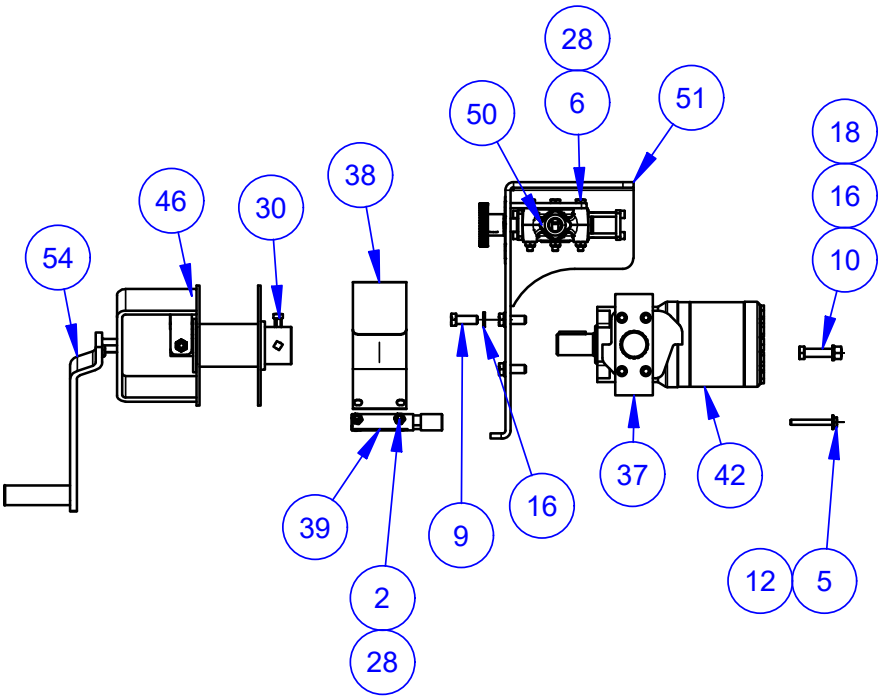


DETAIL C

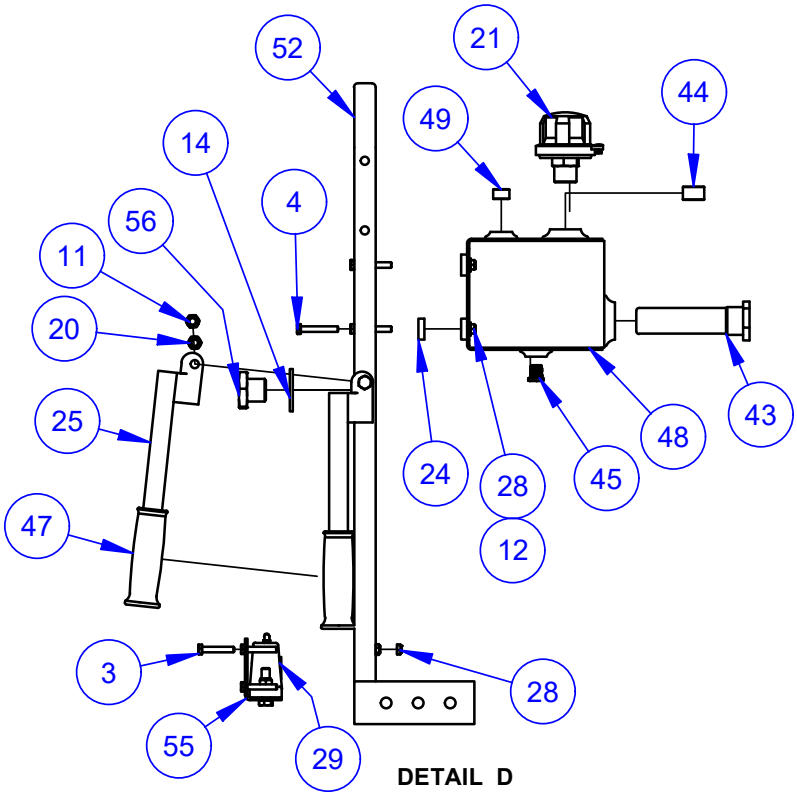


DETAIL D

# 4.11 - (E-STOP) RH Hydraulic Winch Assembly, Parts List

| ITEM | PART NO. | DESCRIPTION | QTY |
|---|---|---|---|
| 1 | 000751 | CABLE, 5/32 7 X 19 GALV | * |
| 2 | 010003 | FASTENER, HHCS 1/4-20 X 1 | 2 |
| 3 | 010005 | FASTENER, HHCS 1/4-20 X 1-1/2 | 7 |
| 4 | 010006 | FASTENER, HHCS 1/4-20 X 1-3/4 | 4 |
| 5 | 010007 | FASTENER, HHCS 1/4-20 X 2 | 1 |
| 6 | 010008 | FASTENER, HHCS 1/4-20 X 2-1/4 | 3 |
| 7 | 010019 | FASTENER, HHCS 5/16-18 X 3/4 | 4 |
| 8 | 010021 | FASTENER, HHCS 5/16-18 X 1-1/4 | 4 |
| 9 | 010036 | FASTENER, HHCS 3/8-16 X 1 | 4 |
| 10 | 010039 | FASTENER, HHCS 3/8-16 X 1 3/4 | 1 |
| 11 | 010040 | FASTENER, HHCS 3/8-16 X 2 | 2 |
| 12 | 010081 | FASTENER, FW 1/4 | 5 |
| 13 | 010082 | FASTENER, FW 5/16 | 8 |
| 14 | 010088 | FASTENER, FW 1” | 1 |
| 15 | 010090 | FASTENER, LW 5/16 | 4 |
| 16 | 010091 | FASTENER, LW 3/8 | 5 |
| 17 | 010100 | FASTENER, HEX NUT 5/16-18 | 8 |
| 18 | 010102 | FASTENER, HEX NUT 3/8-16 | 1 |
| 19 | 010273 | KEY, 3/16 SQ X 2 | 3 |
| 20 | 010464 | FASTENER, HEX NUT NYLOK 3/8-16 | 2 |
| 21 | 010495 | FILLER BREATHER WITH BAFFLE | 1 |
| 22 | 010500 | PULLEY, AK39X1/2 | 1 |
| 23 | 011896 | PULLEY, AK20 X 3/4 SP22H | 1 |
| 24 | 015713 | BUSHING, NITRILE | 4 |
| 25 | 017066 | SCREED LIFTING HANDLE | 2 |
| 26 | 017751 | FASTENER, FW 3/8 | 6 |
| 27 | 020514 | FASTENER, HEX NUT STOVER LOCK 3/8-16 | 6 |
| 28 | 020542 | FASTENER, HEX NUT STOVER LOCK 1/4-20 | 16 |
| 29 | 020704 | BEARING 3/4” PB | 3 |
| 30 | 022297 | FASTENER, SQHSS 5/16-24 X 1 | 3 |
| 31 | 022656 | CLAMP,CABLE 3/16/SP23 SPREADER | 2 |
| 32 | 025992 | PULLEY BLOCK, HD W/EYEBOLT | 1 |
| 33 | 026486 | V-BELT | 1 |
| 34 | 027903 | COVER, HYD WINCH PUMP | 1 |
| 35 | 028402 | FASTENER, HHCS 3/8-16 x 1-1/2 | 6 |
| 36 | 029105 | PUMP, GEAR RH | 1 |

*100FT of 000751 cable per winch.

# 4.11 - (E-STOP) RH Hydraulic Winch Assembly, Parts List Continued

| ITEM | PART NO. | DESCRIPTION | QTY |
|---|---|---|---|
| 37 | 029107 | VALVE, FLOW CONTROL | 1 |
| 38 | 029108 | SPRING, NEW STYLE HYD WINCH | 1 |
| 39 | 029109 | ROD, SPRING HYD WINCH NEW STYLE | 1 |
| 40 | 029111 | PLATE, PUMP NEW STYLE HYD WINCH | 1 |
| 41 | 029114 | BRACKET, PUMP MNT HYD WINCH | 1 |
| 42 | 034011 | HYDRUALIC MOTOR | 1 |
| 43 | 034012 | 1 X 1/2 TANK SUCTION STRAINER | 1 |
| 44 | 035327 | PLUG, 3/4-14 NPTF HOLLOW HEX | 1 |
| 45 | 035564 | PLUG, 1/4” NPT MALE | 1 |
| 46 | 038280 | ASSEMBLY, HYD WINCH REEL | 1 |
| 47 | 048308 | GRIP, HANDLE (7/8”ID) | 2 |
| 48 | 065666 | WELDMENT, HYDRAULIC TANK UNIVERSAL | 1 |
| 49 | 065669 | PLUG, 3/4-14 NPTF HOLLOW HEX | 1 |
| 50 | 073308 | VALVE, HYDRAULIC CAM ACTIVATION FOR GROUND DRIVE | 1 |
| 51 | 076308 | BRACKET, RH WINCH E-STOP | 1 |
| 52 | 109000 | HANDLE, STANDARD END | 1 |
| 53 | 110008 | HOOK, SLIP 1/4” PLATED BULK | 1 |
| 54 | 110102 | HANDLE, WINCH | 1 |
| 55 | 112000 | BRACKET, BEARING SUPPORT | 1 |
| 56 | 113000 | END HANDLE NUT | 1 |

# 4.12 - (E-STOP) LH Hydraulic Winch Assembly, Illustration

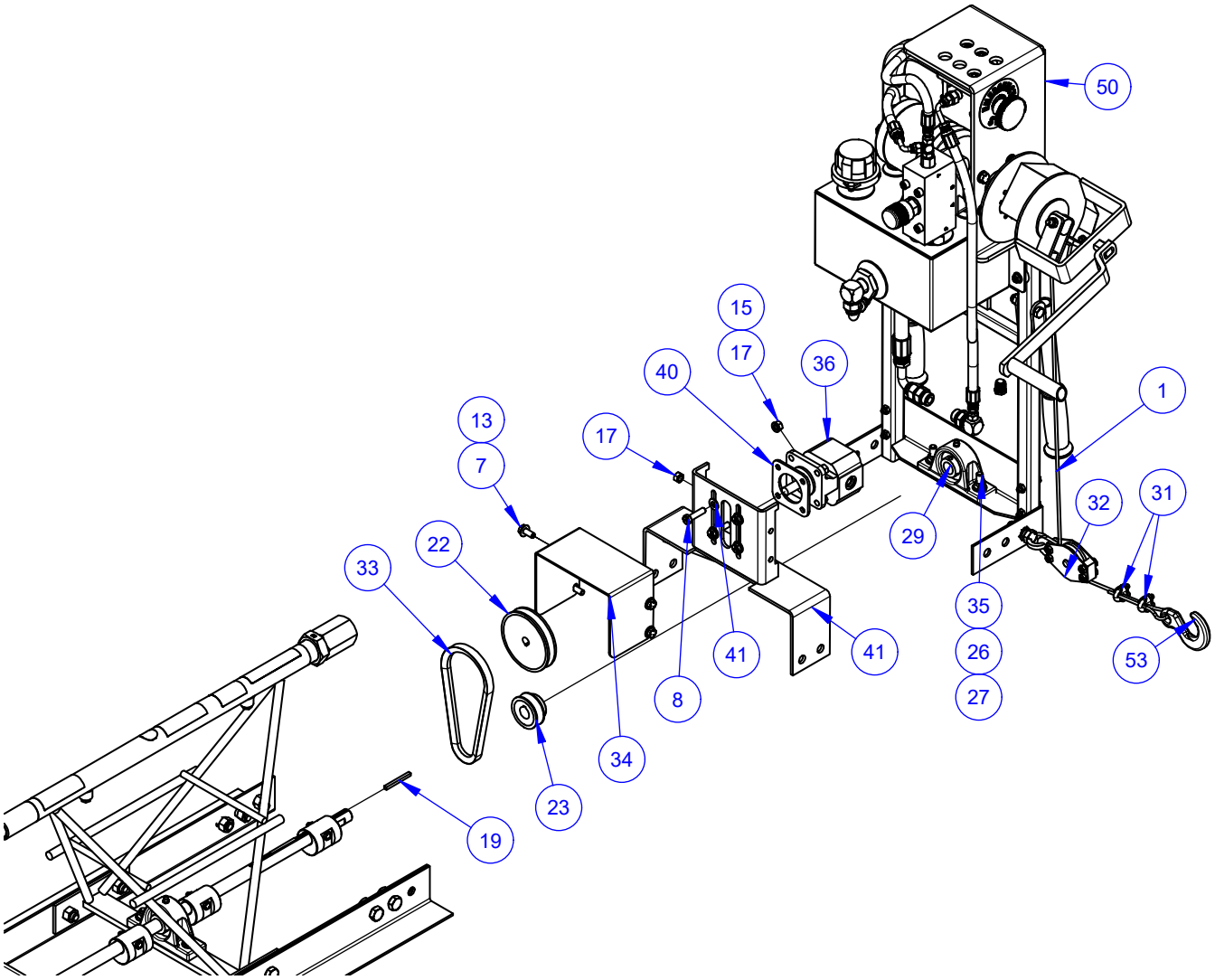

# 4.12 - (E-STOP) LH Hydraulic Winch Assembly, Illustration Continued

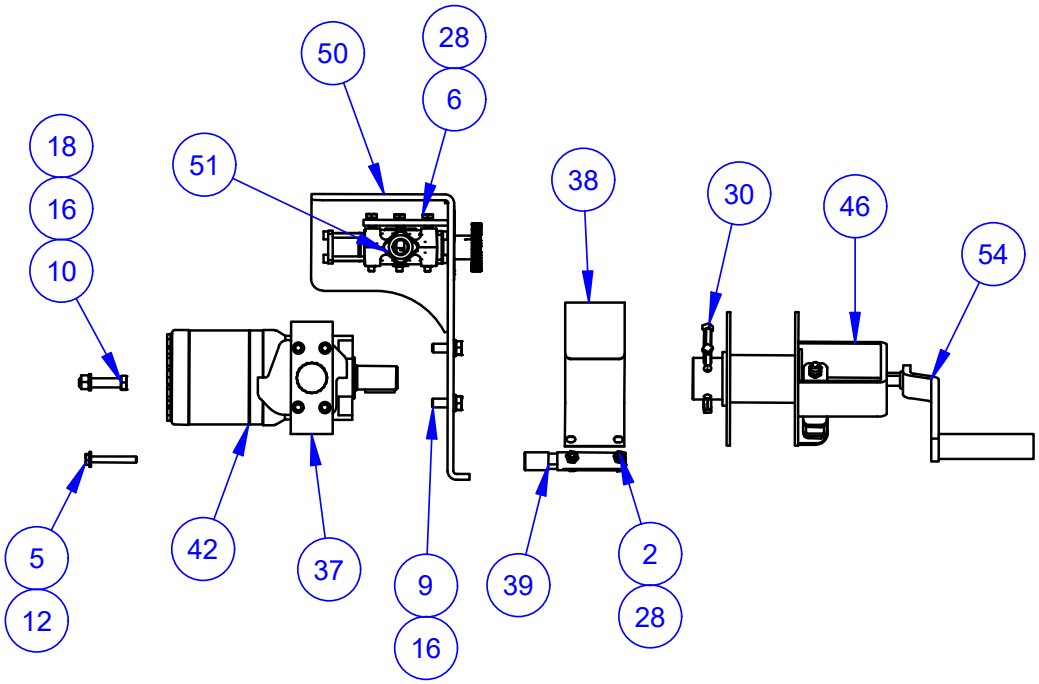


DETAIL C

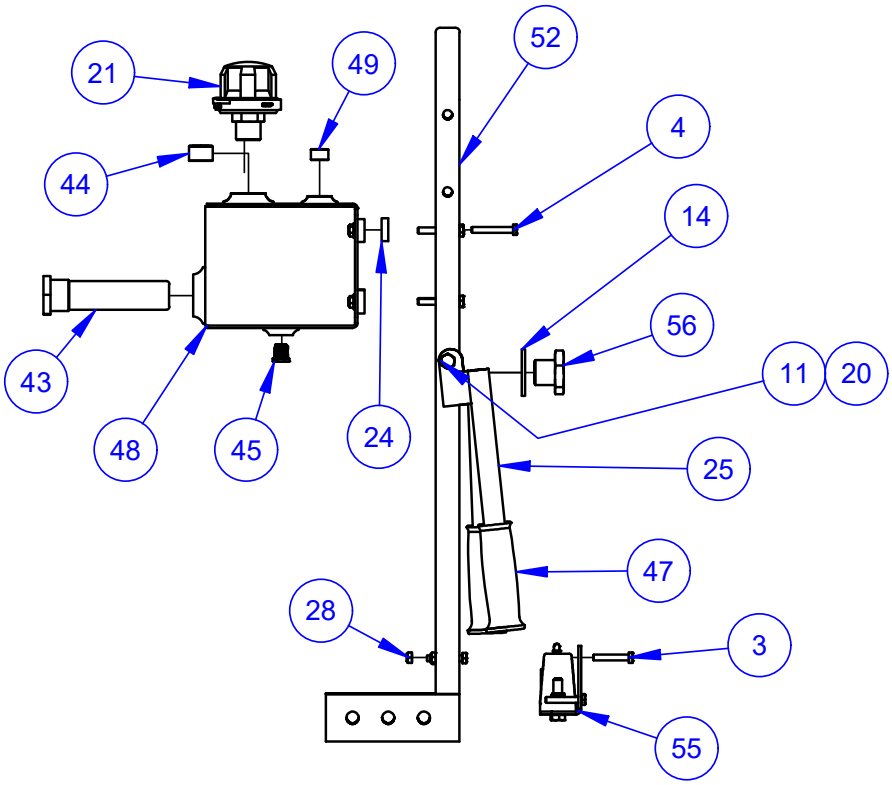


DETAIL D

# 4.12 - (E-STOP) LH Hydraulic Winch Assembly, Parts List

| ITEM | PART NO. | DESCRIPTION | QTY |
|---|---|---|---|
| 1 | 000751 | CABLE, 5/32 7 X 19 GALV | * |
| 2 | 010003 | FASTENER, HHCS 1/4-20 X 1 | 2 |
| 3 | 010005 | FASTENER, HHCS 1/4-20 X 1-1/2 | 7 |
| 4 | 010006 | FASTENER, HHCS 1/4-20 X 1-3/4 | 4 |
| 5 | 010007 | FASTENER, HHCS 1/4-20 X 2 | 1 |
| 6 | 010008 | FASTENER, HHCS 1/4-20 X 2-1/4 | 3 |
| 7 | 010019 | FASTENER, HHCS 5/16-18 X 3/4 | 4 |
| 8 | 010021 | FASTENER, HHCS 5/16-18 X 1-1/4 | 4 |
| 9 | 010036 | FASTENER, HHCS 3/8-16 X 1 | 4 |
| 10 | 010039 | FASTENER, HHCS 3/8-16 X 1 3/4 | 1 |
| 11 | 010040 | FASTENER, HHCS 3/8-16 X 2 | 2 |
| 12 | 010081 | FASTENER, FW 1/4 | 5 |
| 13 | 010082 | FASTENER, FW 5/16 | 8 |
| 14 | 010088 | FASTENER, FW 1” | 1 |
| 15 | 010090 | FASTENER, LW 5/16 | 4 |
| 16 | 010091 | FASTENER, LW 3/8 | 5 |
| 17 | 010100 | FASTENER, HEX NUT 5/16-18 | 8 |
| 18 | 010102 | FASTENER, HEX NUT 3/8-16 | 1 |
| 19 | 010273 | KEY, 3/16 SQ X 2 | 3 |
| 20 | 010464 | FASTENER, HEX NUT NYLOK 3/8-16 | 2 |
| 21 | 010495 | FILLER BREATHER WITH BAFFLE | 1 |
| 22 | 010500 | PULLEY, AK39X1/2 | 1 |
| 23 | 011896 | PULLEY, AK20 X 3/4 SP22H | 1 |
| 24 | 015713 | BUSHING, NITRILE | 4 |
| 25 | 017066 | SCREED LIFTING HANDLE | 2 |
| 26 | 017751 | FASTENER, FW 3/8 | 6 |
| 27 | 020514 | FASTENER, HEX NUT STOVER LOCK 3/8-16 | 6 |
| 28 | 020542 | FASTENER, HEX NUT STOVER LOCK 1/4-20 | 16 |
| 29 | 020704 | BEARING 3/4” PB | 3 |
| 30 | 022297 | FASTENER, SQHSS 5/16-24 X 1 | 3 |
| 31 | 022656 | CLAMP,CABLE 3/16/SP23 SPREADER | 2 |
| 32 | 025992 | PULLEY BLOCK, HD W/EYEBOLT | 1 |
| 33 | 026486 | V-BELT | 1 |
| 34 | 027903 | COVER, HYD WINCH PUMP | 1 |
| 35 | 028402 | FASTENER, HHCS 3/8-16 x 1-1/2 | 6 |
| 36 | 029104 | PUMP, GEAR LH | 1 |

*100FT of 000751 cable per winch.

# 4.12 - (E-STOP) LH Hydraulic Winch Assembly, Parts List Continued

| ITEM | PART NO. | DESCRIPTION | QTY |
|---|---|---|---|
| 37 | 029107 | VALVE, FLOW CONTROL | 1 |
| 38 | 029108 | SPRING, NEW STYLE HYD WINCH | 1 |
| 39 | 029109 | ROD, SPRING HYD WINCH NEW STYLE | 1 |
| 40 | 029111 | PLATE, PUMP NEW STYLE HYD WINCH | 1 |
| 41 | 029114 | BRACKET, PUMP MNT HYD WINCH | 1 |
| 42 | 034011 | HYDRAULIC MOTOR | 1 |
| 43 | 034012 | 1 X 1/2 TANK SUCTION STRAINER | 1 |
| 44 | 035327 | PLUG, 3/4-14 NPTF HOLLOW HEX | 1 |
| 45 | 035564 | PLUG, 1/4” NPT MALE | 1 |
| 46 | 038280 | ASSEMBLY, HYD WINCH REEL | 1 |
| 47 | 048308 | GRIP, HANDLE (7/8”ID) | 2 |
| 48 | 065666 | WELDMENT, HYDRAULIC TANK UNIVERSAL | 1 |
| 49 | 065669 | PLUG, 3/4-14 NPTF HOLLOW HEX | 1 |
| 50 | 076306 | BRACKET, LH WINCH E-STOP | 1 |
| 51 | 081827 | VALVE, E-STOP W/ RED KNOB FOR SCREED HYDRAULIC WINCH ASSEMBLY | 1 |
| 52 | 109000 | HANDLE, STANDARD END | 1 |
| 53 | 110008 | HOOK, SLIP 1/4” PLATED BULK | 1 |
| 54 | 110102 | HANDLE, WINCH | 1 |
| 55 | 112000 | BRACKET, BEARING SUPPORT | 1 |
| 56 | 113000 | END HANDLE NUT | 1 |

# 4.13 - (E-STOP) RH/LH Hydraulic Winch Hoses

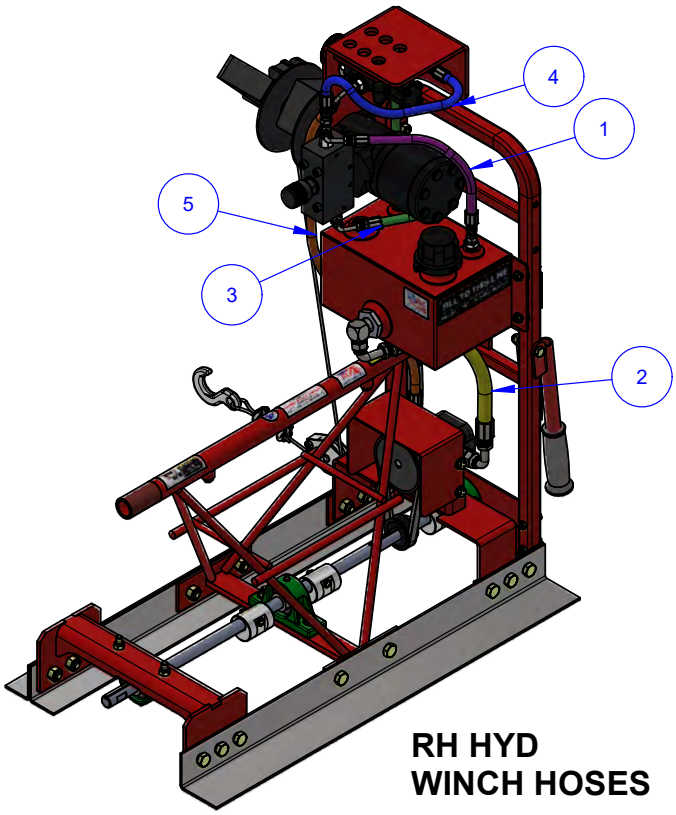


RH HYD
WINCH HOSES

| ITEM | PART NO. | DESCRIPTION | QTY |
|---|---|---|---|
| 1 | 029398 | HOSE, HS-SKD-3 [17”] FLOW VALVE TO TANK | 1 |
| 2 | 029401 | HOSE, HS-SKD-4 [12.5”] RH TANK TO PUMP | 1 |
| 3 | 082744 | HOSE, HS-SKD-5 [12.5”] E-STOP A TO FLOW VALE P | 1 |
| 4 | 082745 | HOSE, HS-SKD-6 [14”] E-STOP B TO FLOW VALVE T | 1 |
| 5 | 082746 | HOSE, HS-SKD-8 [24”] PUMP TO E-STOP P | 1 |

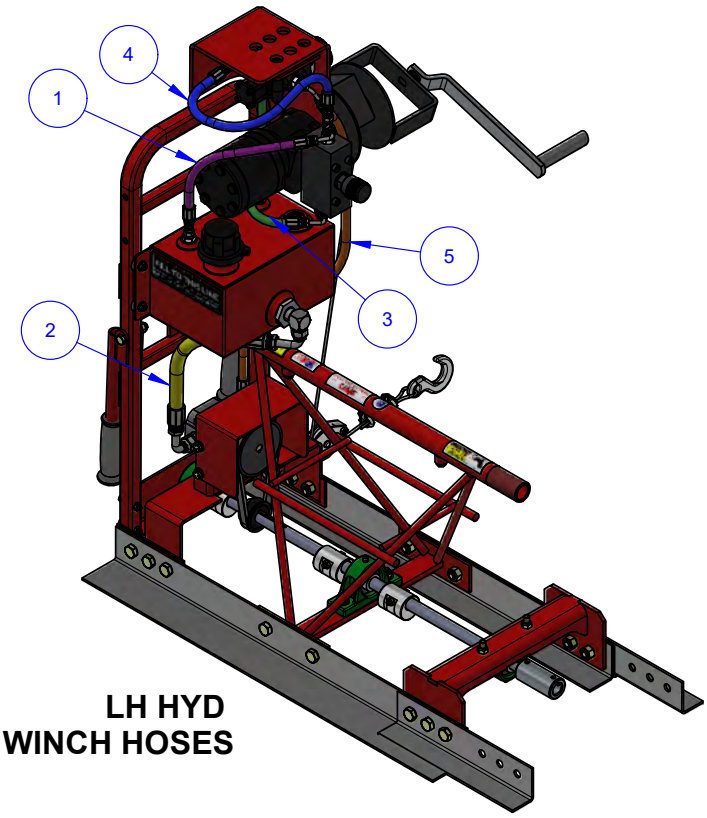


LH HYD
WINCH HOSES

| ITEM | PART NO. | DESCRIPTION | QTY |
|---|---|---|---|
| 1 | 029398 | HOSE, HS-SKD-3 [17”] FLOW VALVE TO TANK | 1 |
| 2 | 029400 | HOSE, HS-SKD-1 [12.5”] LH TANK TO PUMP | 1 |
| 3 | 082744 | HOSE, HS-SKD-5 [12.5”] E-STOP A TO FLOW VALE P | 1 |
| 4 | 082745 | HOSE, HS-SKD-6 [14”] E-STOP B TO FLOW VALVE T | 1 |
| 5 | 082746 | HOSE, HS-SKD-8 [24”] PUMP TO E-STOP P | 1 |

# 4.13 - (E-STOP) Hydraulic Winch Kit, Parts List Continued

**THESE PARTS ARE KITTED FOR A COMPLETE HYDRAULIC SYSTEM ON THE SCREED. PLEASE REFER TO THE PREVIOUS TABLES FOR ORDERING INDIVIDUAL COMPONENTS WITHIN THIS KIT.**

| ITEM | PART NO. | DESCRIPTION | QTY |
|---|---|---|---|
| - | 076328 | KIT, HYD. WINCH W/ E-STOP | - |
| 1 | 034011 | HYDRAULIC MOTOR | 2 |
| 2 | 029104 | RIGHT HAND PUMP | 1 |
| 3 | 029105 | LEFT HAND PUMP | 1 |
| 4 | 010495 | BREATHER, 3/4 NPT | 2 |
| 5 | 034012 | SUCTION STRAINER, 1 X 1/2 W/O BYPASS | 2 |
| 6 | 029107 | MANIFOLD | 2 |
| 7 | 027925 | FITTING, STRAIGHT MALE | 2 |
| 8 | 023414 | FITTING, 90 DEG ELBOW MALE | 2 |
| 9 | 029324 | FITTING, Straight MALE ORING | 2 |
| 10 | 035564 | FITTING, HOLLOW HEX PLUG 1/4” NPT | 2 |
| 11 | 029400 | HOSE, HS-SKD-1 [12.5”] LH TANK TO PUMP | 1 |
| 12 | 029398 | HOSE, HS-SKD-3 [17”] FLOW VALVE TO TANK | 2 |
| 13 | 029401 | HOSE, HS-SKD-4 [12.5”] RH TANK TO PUMP | 1 |
| 14 | 082744 | HOSE, HS-SKD-5 [12.5”] E-STOP A TO FLOW VALE P | 2 |
| 15 | 082745 | HOSE, HS-SKD-6 [14”] E-STOP B TO FLOW VALVE T | 2 |
| 16 | 082746 | HOSE, HS-SKD-8 [24”] PUMP TO E-STOP P | 2 |
| 17 | 046360 | FITTING, STRAIGHT MALE | 4 |
| 18 | 048740 | FITTING, 90 DEG ELBOW MALE | 2 |
| 19 | 049388 | FITTING, 90 DEG ELBOW MALE | 4 |
| 20 | 082743 | FITTING,TEE MALE | 2 |
| 21 | 073896 | FITTING, REDUCER | 2 |
| 22 | 068794 | FITTING, 90 DEG ELBOW ML X FM SWIVEL | 2 |
| 23 | 073308 | VALVE E-STOP | 2 |

# 4.14 - Flex Coupler Assembly, Illustration & Parts List

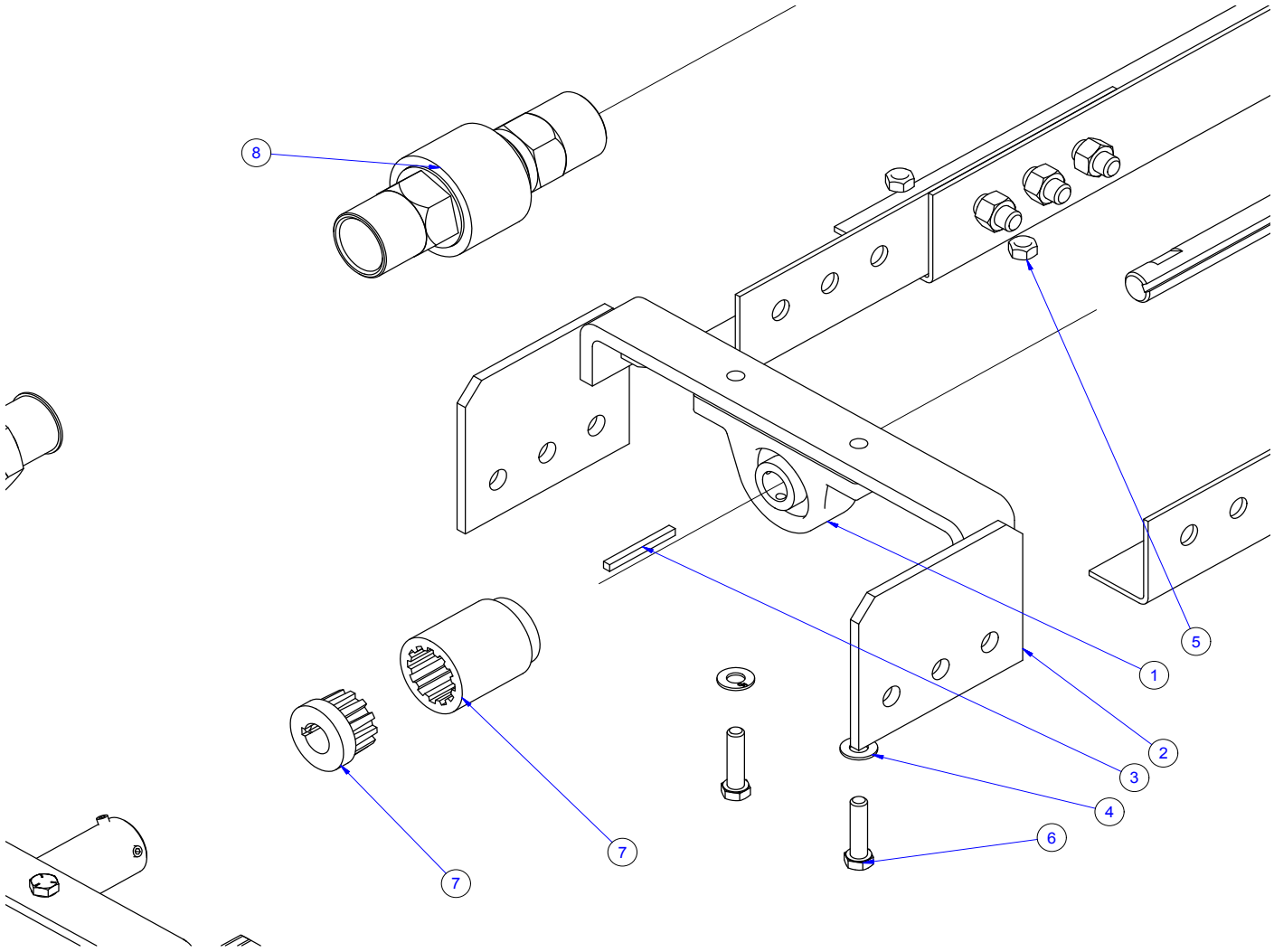


| ITEM | PART NO. | DESCRIPTION | QTY |
|---|---|---|---|
| 1 | 020704 | BEARING 3/4" PB (p) | 2 |
| 2 | 221155 | SUPPORT OFF INTERMEDIAT BRG | 2 |
| 3 | 010273 | KEY, 3/16 SQ X 2 | 2 |
| 4 | 017751 | FASTENER, FLAT WASHER HARD A325 3/8 (p) | 6 |
| 5 | 020514 | FASTENER, NUT STOVER LOCK 3/8-16 (p) | 4 |
| 6 | 010038 | FASTENER, HHCS 3/8-16 X 1-1/2 GR 5 | 4 |
| 7 | 020699 | COUPLER-FLEX 43 PG/SF-2-7/8 | 1 |
| 8 | 022599 | COUPLER,LRG T/P BALL JOINT 1 5/16 (p | 1 |

# 4.15 - U-Joint Assembly, Illustration & Parts List

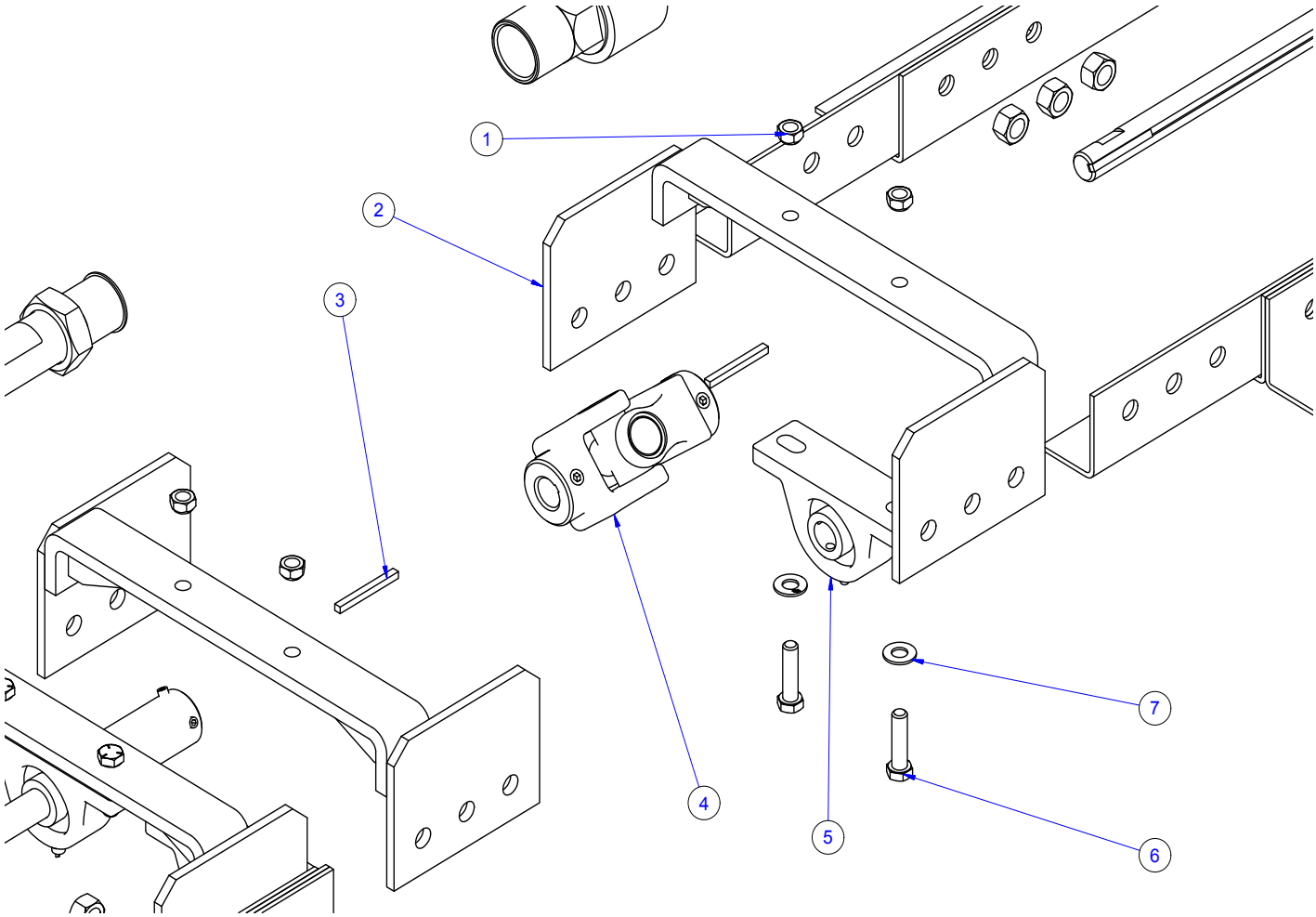


| ITEM | PART NO. | DESCRIPTION | QTY |
|---|---|---|---|
| 1 | 020514 | FASTENER, NUT STOVER LOCK 3/8-16 | 4 |
| 2 | 221155 | SUPPORT OFF INTERMEDIAT BRG | 2 |
| 3 | 010273 | KEY, 3/16 SQ X 2 | 2 |
| 4 | 022635 | UNIVERSAL JOINT ASSEMBLY MOD,ED SC (p) | 1 |
| 5 | 020704 | BEARING 3/4" PB (p) | 2 |
| 6 | 010038 | FASTENER, HHCS 3/8-16 X 1-1/2 GR 5 | 4 |
| 7 | 017751 | FASTENER, FLAT WASHER HARD A325 3/8 (p) | 6 |

# 4.16 - Crown Invert Bracket Assembly, Illustration

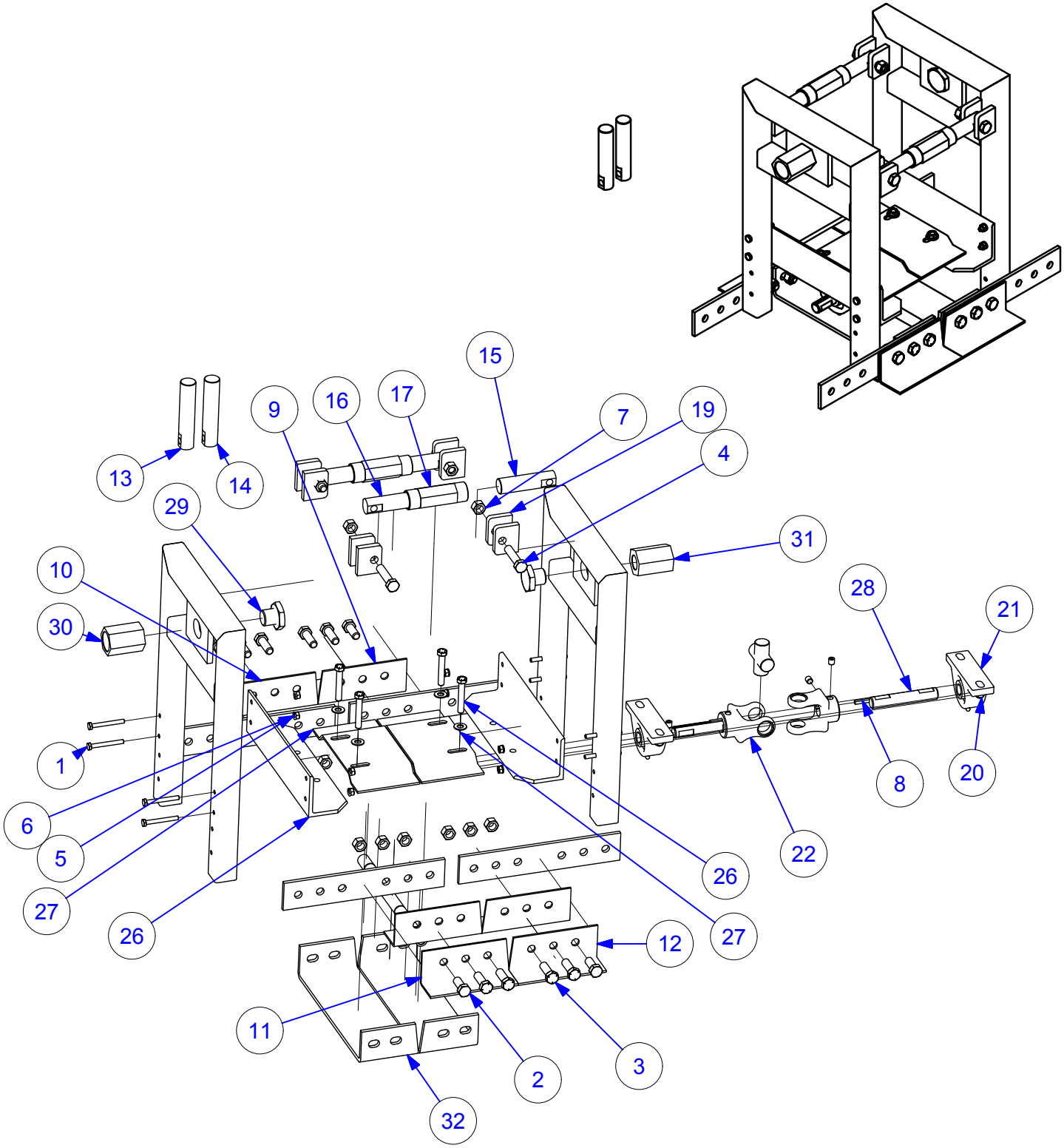

# 4.16 - Crown Invert Bracket Assembly, Parts List

| ITEM | PART # | DESCRIPTION | QTY |
|---|---|---|---|
| 1 | 010008 | FASTENER, HHCS 1/4-20 X 2-1/4 GR 5 | 8 |
| 2 | 010068 | FASTENER, HHCS 1/2-13 X 1-1/4 GR 5 | 4 |
| 3 | 010069 | FASTENER, HHCS 1/2-13 X 1-1/2 GRADE 8 | 8 |
| 4 | 010072 | FASTENER, HHCS 1/2-13 X 2-1/4 GR 5 | 4 |
| 5 | 010089 | FASTENER, LOCK WASHER 1/4 | 8 |
| 6 | 010098 | FASTENER, NUT HEX 1/4-20 | 8 |
| 7 | 010106 | FASTENER, NUT HEX 1/2-13 GR8 | 16 |
| 8 | 010273 | KEY, 3/16 SQ X 2 | 2 |
| 9 | 010432 | BLADE, 12HD RH CROWN INV BULLFLT (p) | 1 |
| 10 | 010433 | BLADE, 12HD LH CROWN INV BULLFLT (p) | 1 |
| 11 | 010434 | BLADE, 12HD RH CROWN INVERT SCD (p) | 2 |
| 12 | 010435 | BLADE, 12HD LH CROWN INVERT SCD (p) | 2 |
| 13 | 010440 | ROD RH CROWN ADJ | 1 |
| 14 | 010441 | ROD LH CROWN ADJ | 1 |
| 15 | 010454 | ROD RH INVERT ADJ | 2 |
| 16 | 010455 | ROD RH INVERT ADJ | 2 |
| 17 | 016885 | TURNBUCKLE INVERT COUPLER ASSEMBLY | 2 |
| 18 | 017751 | FASTENER, FLAT WASHER HARD A325 3/8 (p) | 8 |
| 19 | 018212 | HANDLE,CROWN INVERT | 2 |
| 20 | 020514 | FASTENER, NUT STOVER LOCK 3/8-16 | 4 |
| 21 | 020704_A | BEARING 3/4" PB (p) | 2 |
| 22 | 022635 | UNIVERSAL JOINT ASSEMBLY MOD,ED SC (p) | 1 |
| 25 | 040637 | BOLT, 3/8-16 X 2-1/4 GR 8 HHC | 4 |
| 26 | 046656 | BEARING SUPPORT CROWN INVERT BRACKET | 2 |
| 27 | 046657 | COVER, SHAFT F/ NCI CROWN | 2 |
| 28 | 046658 | SHAFT, NCI CROWN INVERT | 2 |
| 29 | 113000 | END HANDLE NUT | 2 |
| 30 | 114000 | RH AIR END SX ADAPTOR | 1 |
| 31 | 115000 | LH AIR END SX ADAPTOR | 1 |
| 32 | 221165 | HINGE ASSEMBLY | 1 |

# 4.17 - End Mount Engine Assembly, Illustration

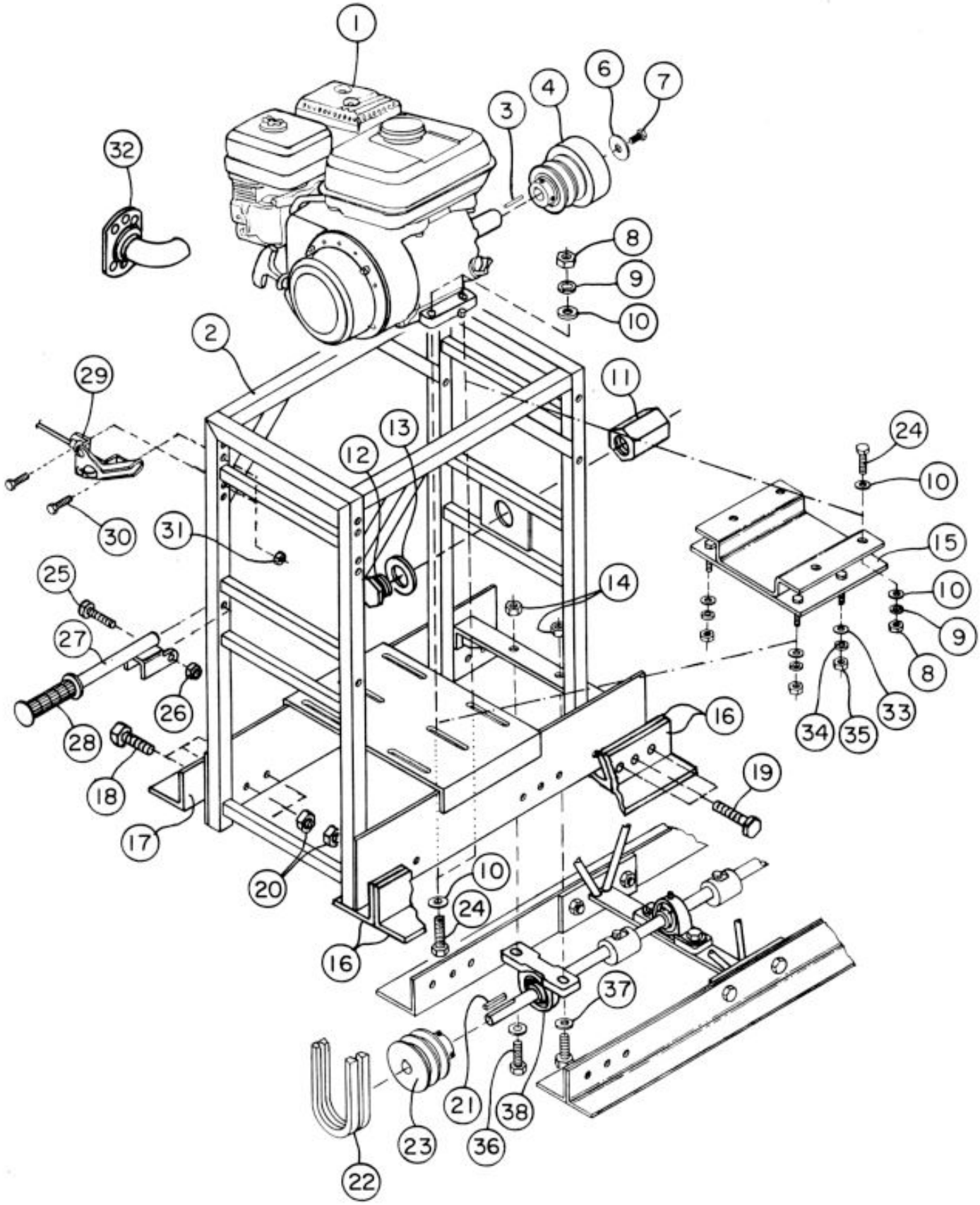

# 4.17 - End Mount Assembly, Parts List

| ITEM | PART NO. | DESCRIPTION | QTY |
|---|---|---|---|
| 1 | 020203 | ENGINE 5.5 HP | 1 |
| 2 | 126001 | HANDLE | 1 |
| 3 | 010273 | KEY | 1 |
| 4 | 100620 | CLUTCH | 1 |
| 6 | 010082 | WASHER FLAT | 1 |
| 7 | 020829 | BOLT 5/16 X 1 3/4 | 1 |
| 8 | 010100 | NUT HEX 5/16 | 4 |
| 9 | 010090 | WASHER LOCK | 4 |
| 10 | 010082 | WASHER FLAT | 8 |
| 11 | 114000 | R.H. ADAPTOR | 1 |
| 12 | 113000 | NUT END | 1 |
| 13 | 010088 | WASHER | 1 |
| 14 | 020514 | NUT STOVER 3/8 | 2 |
| 15 | 027483 | ENGINE MOUNT | 1 |
| 16 | 102003 | BLADE, SCREED 18" | 2 |
| 17 | 104003 | BLADE, BULLFLOAT 18" | 1 |
| 18 | 010066 | BOLT 1/2 X 3/4 | 6 |
| 19 | 010067 | BOLT 1/2 X 1 | 6 |
| 20 | 010106 | NUT, HEX 1/2 | 12 |
| 21 | 010273 | KEY | 1 |
| 22 | 020720 | V-BELT | 2 |
| 23 | 020698 | PULLY | 1 |
| 24 | 010023 | BOLT 5/16 X 1 3/4 | 4 |
| 25 | 010040 | BOLT 3/8 X 2 | 2 |
| 26 | 010464 | NUT, NYLON | 2 |
| 27 | 017066 | HANDLE | 2 |
| 28 | 015767 | GRIP, HANDLE | 2 |
| 29 | 124000 | THROTTLE ASSEMBLY | 1 |
| 30 | 010002 | BOLT 1/4 X 3/4 | 2 |
| 31 | 020542 | NUT, STOVER | 2 |
| 32 | 020983 | MUFFLER | 1 |
| 33 | 010091 | WASHER FLAT | 4 |
| 34 | 010091 | WASHER LOCK | 4 |
| 35 | 010102 | NUT, HEX 1/2 | 4 |
| 36 | 010038 | BOLT 3/8 X 1 1/2 | 2 |

# 4.18 - Bridge Deck Handle Assembly, Illustration & Parts List

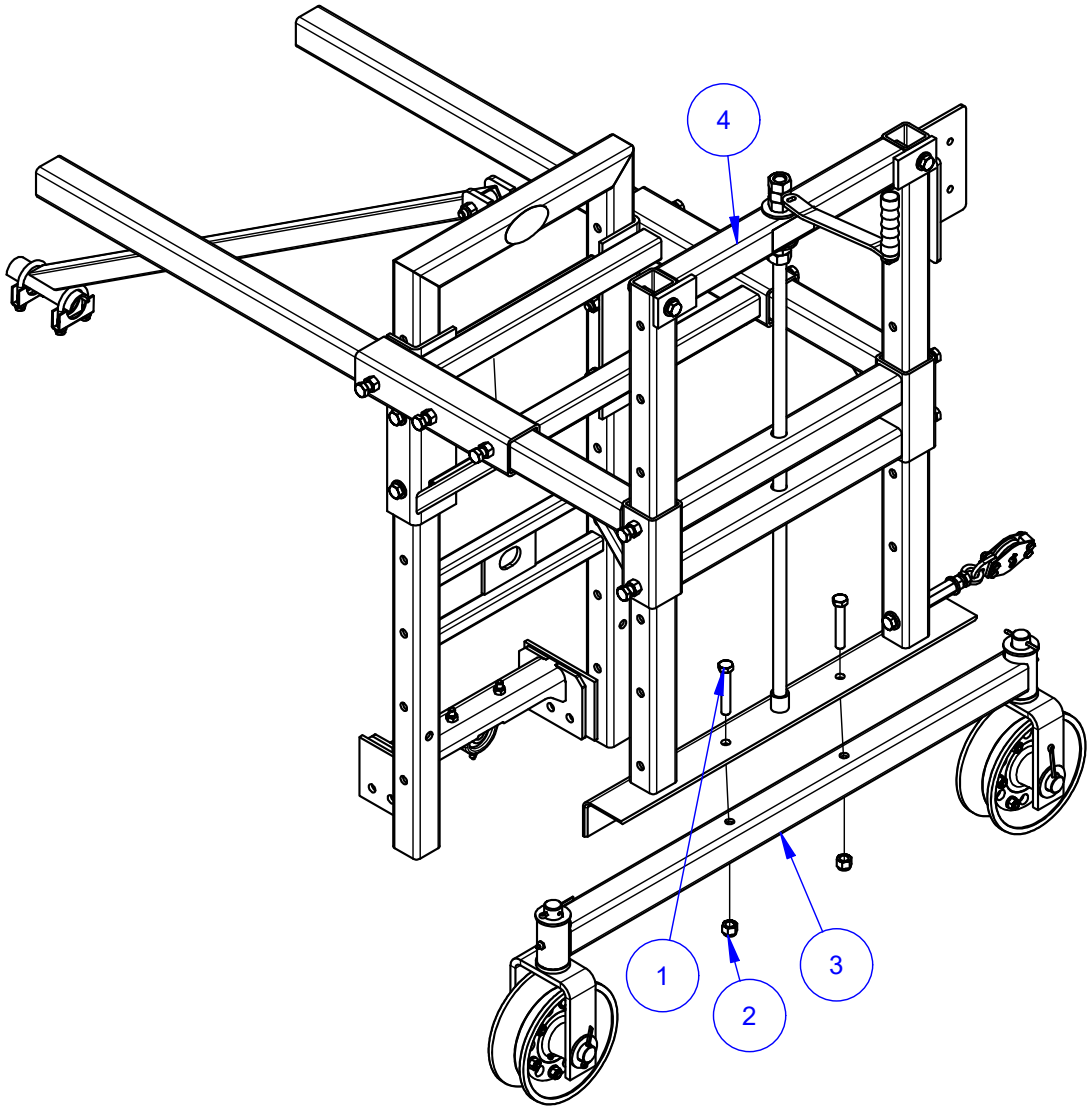


| ITEM | PART NO. | DESCRIPTION | QTY |
|---|---|---|---|
| 1 | 010075 | FASTENER, HHCS 1/2-13 X 3 | 2 |
| 2 | 011238 | FASTENER, HEX NUT NYLOCK 1/2-13 | 2 |
| 3 | 022977 | ROLLER ASSY W/ 6” CUP WHEELS | 1 |
| 4 | 506000 | STEEL BRIDGE DECK END BRACKET | 1 |

# 4.19 - Bridge Deck Roller Wheel Assembly, Illustration & Parts List

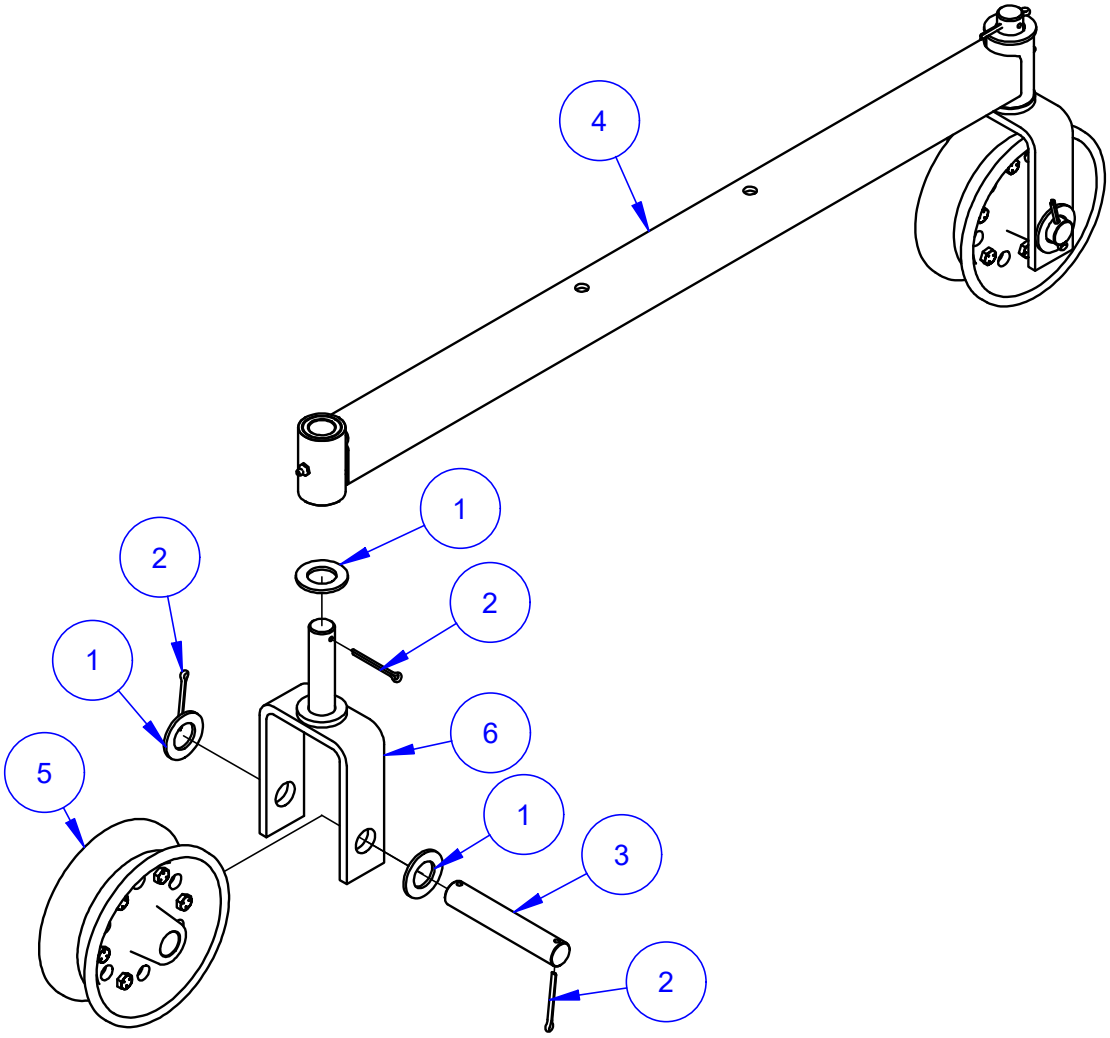


| ITEM | PART NO. | DESCRIPTION | QTY |
|---|---|---|---|
| 1 | 010088 | FASTENER, FW 1” | 6 |
| 2 | 010133 | PIN, COTTER Ø3/16 X 2 | 6 |
| 3 | 010157 | AXLE, WHEEL ASSY | 2 |
| 4 | 022968 | TUBE & PIVOT HOUSING BRIDGE DK | 1 |
| 5 | 052001 | WHEEL ASSEMBLY | 2 |
| 6 | 061008 | WELDMENT, YOKE 6” WHEEL | 2 |

# 4.20 - Bridge Deck End Bracket Assembly, Illustration

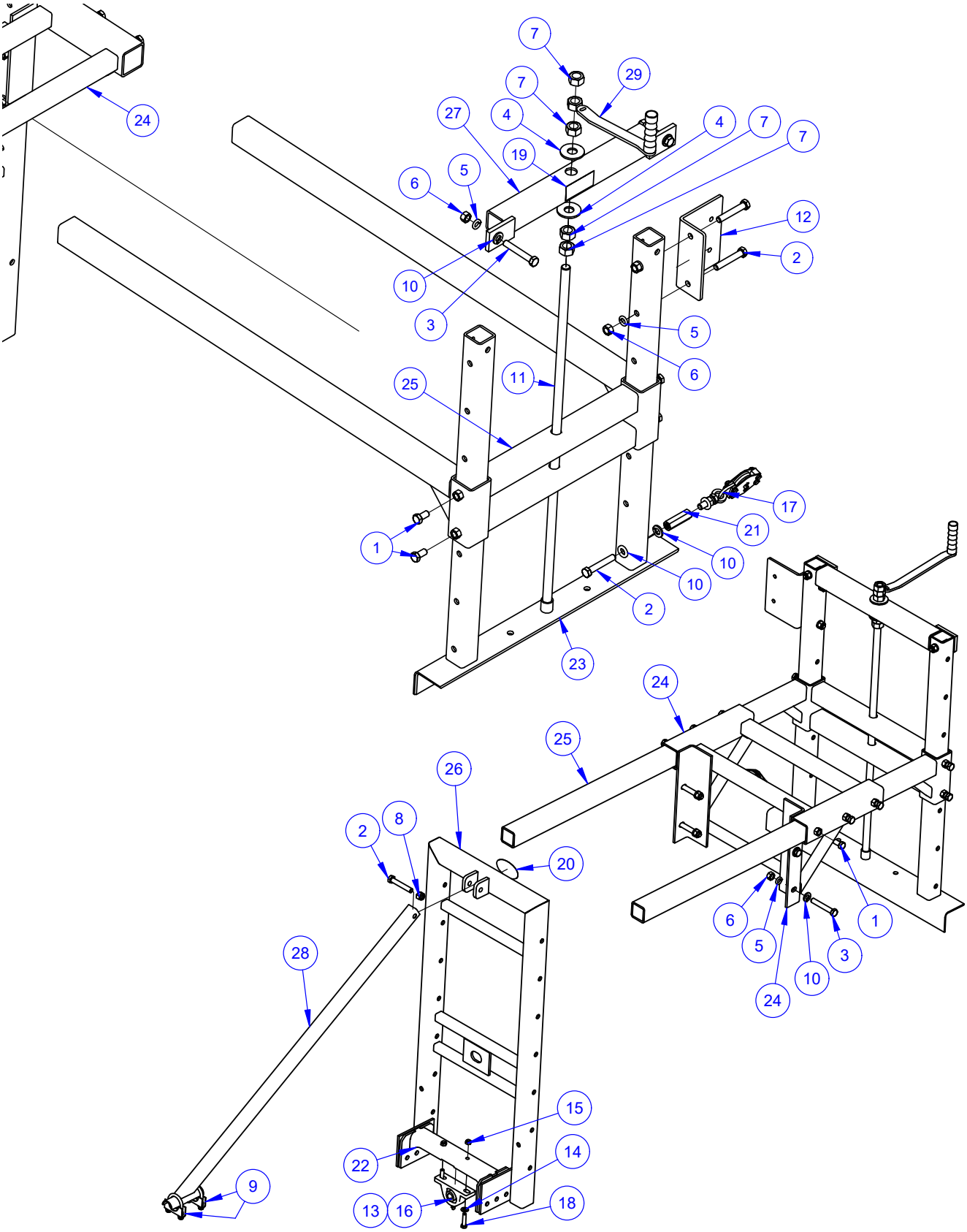

# 4.20 - Bridge Deck End Bracket Assembly, Parts List

| ITEM | PART NO. | DESCRIPTION | QTY |
|---|---|---|---|
| 1 | 010067 | FASTENER, HHCS 1/2-13 X 1 | 10 |
| 2 | 010075 | FASTENER, HHCS 1/2-13 X 3 | 4 |
| 3 | 010076 | FASTENER, HHCS 1/2-13 X 3-1/4 | 6 |
| 4 | 010087 | FASTENER, FW 3/4 | 2 |
| 5 | 010093 | FASTENER, LW 1/2 | 8 |
| 6 | 010106 | FASTENER, NUT HEX 1/2-13 | 8 |
| 7 | 010112 | FASTENER, HEX NUT 3/4-10 | 4 |
| 8 | 011238 | FASTENER, HEX NUT NYLOCK 1/2-13 | 1 |
| 9 | 011281 | CLAMP, MUFFLER 1-1/2 | 2 |
| 10 | 011490 | FASTENER, FW 1/2 | 8 |
| 11 | 011515 | ALL THREAD 3/4-10 X 36-1/4 LONG | 1 |
| 12 | 011619 | WINCH MOUNT BRACKET FOR BD HANDLE | 1 |
| 13 | 015692 | CAP, Ø1/4 RED GREASE | 1 |
| 14 | 017751 | FASTENER, FW 3/8 | 2 |
| 15 | 020514 | FASTENER, HEX NUT STOVER 3/8-16 | 2 |
| 16 | 020704 | BEARING 3/4” PB | 1 |
| 17 | 025992 | PULLEY BLOCK, HD W/ EYEBOLT | 1 |
| 18 | 028402 | FASTENER, HHCS 3/8-16 x 1-1/2 | 2 |
| 19 | 056336 | DECAL, AEC 1.5 X 3.25 | 1 |
| 20 | 056341 | DECAL ALLEN OVAL 2” X 3.34” WHITE | 1 |
| 21 | 071590 | 2-1/2” FEMALE THREADED HEX STANDOFF | 1 |
| 22 | 135000 | SUPPORT, ED INTERMEDIATE F/ BEARING | 1 |
| 23 | 221427 | VERTICAL SLIDE ASSY HD BD | 1 |
| 24 | 221428 | VERTICAL ADJUSTMENT ASSY | 1 |
| 25 | 221430 | HORIZONTAL SLIDE ASSY HD BD | 1 |
| 26 | 221432 | HANDLE, HD BD END | 1 |
| 27 | 221436 | VERTICAL SLIDE ADJ BAR-SP. HD BDF | 1 |
| 28 | 221535 | BD HANDLE BRACE | 1 |
| 29 | 221610 | WINCH HANDLE F/ SPECIAL HD BD | 1 |

# 4.21 - SE12 Eng (Honda) Service Parts, for GX270

Engine, GX270
AEC PN: 042481

Engine Oil 10W30 (1 QT)
AEC PN: 081250

Spark Plug
AEC PN: 081288

Ignition Coil
AEC PN: 081283

Element for Air Cleaner
AEC PN: 081265

Gasket for Air Cleaner
AEC PN: 081268

Starter Recoil (Red)
AEC PN: 081277

Starter Recoil (BLK)
AEC PN: 081276

Nut A/C Cover
AEC PN: 081287

HONDA

Carburetor BE70U A
AEC PN: 081260

Carburetor BE21J A
AEC PN: 081255

***NOTE: Images for reference only***

# 4.22 - SE12 Eng (Honda) Service Parts, for GX340

Engine, GX340
AEC PN: 018967

Engine Oil 10W30 (1 QT)
AEC PN: 081250

Spark Plug
AEC PN: 081288

Ignition Coil
AEC PN: 081284

Element for Air Cleaner
AEC PN: 066440

Gasket for Air Cleaner
AEC PN: 081268

Starter Recoil (Red)
AEC PN: 081277

Starter Recoil (BLK)
AEC PN: 081278

Nut A/C Cover
AEC PN: 081287

Carburetor BE8OZ A
AEC PN: 081262

Carburetor BE80M A
AEC PN: 081261

***NOTE: Images for reference only***

# 4.23 - Kit, Decals (068412) SE12 Screed Section

| ITEM | PART NO. | DESCRIPTION | QTY |
|---|---|---|---|
| 1 | 068411 | DECAL, ALLEN RAZORBACK SA12 9X1.34 | 1 |
| 2 | 068417 | DECAL, DO NOT CROWN 7.6648X1.615 | 1 |
| 3 | 068488 | DECAL, SE12  4.732 X 1.6288 | 1 |
| 4 | 075159 | DECAL, QR CODE | 1 |

NOTE: One 068412 Screed Section Decal Kit is used per frame section (2ft, 2.5ft, 5ft, 7.5ft, 10ft).

# 4.24 - Kit, Decals (068421) SE12 Engine

| ITEM | PART NO. | DESCRIPTION | QTY |
|---|---|---|---|
| 1 | 067304 | REFUELING INSTRUCTIONS 5.25 X 2.45 | 1 |
| 2 | 068416 | DECAL, WARNING 2.5123X1.2762 | 1 |
| 3 | 068419 | DECAL, LARGE SE12 11.8323X4.7375 | 1 |

# 4.25 - Kit, Decals (068512) Screed Power Winch

| ITEM | PART NO. | DESCRIPTION | QTY |
|---|---|---|---|
| 1 | 068404 | DECAL, AEC INFO DETAIL SCREED 4.2861X1.7145 | 2 |
| 2 | 068406 | DECAL, CRUSH 0.75X0.75 | 6 |
| 3 | 068423 | DECAL, ANCHOR CABLES 2.52X1.62 | 2 |
| 4 | 068424 | DECAL, FILL LINE 6X1.57 | 2 |
| 5 | 068446 | DECAL, CE 1.25 | 2 |
| 6 | 070402 | DECAL, DANGER - HIGH PRESSURE WARNING, 3.33” X 2.5” | 2 |
| 7 | 076309 | DECAL, EMERGENCY STOP F/ SCREED WINCH | 2 |

# 4.26 - Kit, Decals (068513)SE12 Manual Winch End Handle

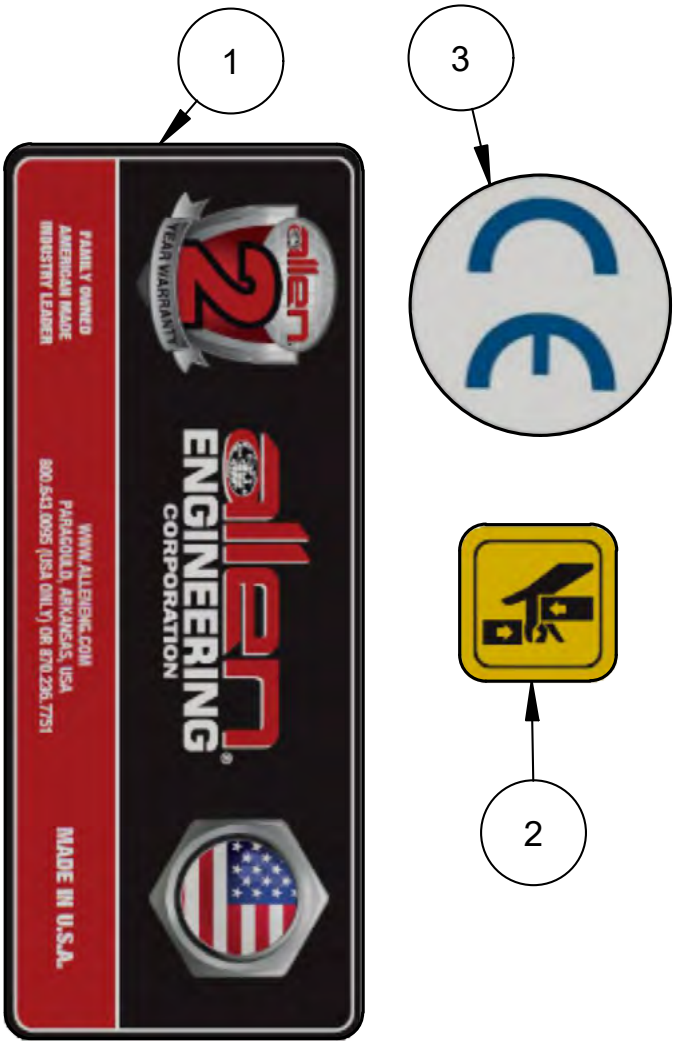


| ITEM | PART NO. | DESCRIPTION | QTY |
|---|---|---|---|
| 1 | 068404 | DECAL, AEC INFO DETAIL SCREED 4.2861X1.7145 | 2 |
| 2 | 068406 | DECAL, CRUSH SA12 0.75X0.75 | 4 |
| 3 | 068446 | DECAL, CE 1.25 | 2 |

# Revision Detail

## MANUAL REVISION DETAIL

| REVISION # | REVISION DATE | REVISION REFERENCE # | REVISION BY |
|---|---|---|---|
| - | 10/15 | Initial Release | AW |
| A | 06/16 | - | AW |
| B | 06/18 | MN 18-011, 18-020, 18-060 | MW |
| C | 01/22 | Updated Covers | MK |
| D | 03/24 | Corrected Typos (Air screed info, General edits, Patent list) | MK |
| E | 05/24 | 24-320 | MK |
| F | 07/25 | 25-242 Added Honda Eng service parts pages | MK |
| G | 02/26 | Warranty policy update 2026 | MK |
| H | 09/26 | Decal kit corrections, E-Stop Winch Update | MK |
| I | 10/26 | Added 070334 BD Handle Illustrations | MK |

Copyright © 2018 Allen Engineering Corporation
All rights reserved

All information, specifications, and illustrations in this manual are subject to change without notice and are based on the latest information at the time of publication. No part of this manual may be reproduced or transmitted in any form or by any means, electronic or mechanical, for any purpose, without the express written permission of Allen Engineering Corporation (AEC). AEC assumes no responsibility or liability for any errors or inaccuracies that may appear in this manual.

Allen Products are covered under one or more of the following patent numbers:
10,100,537; 9,068,301; 9,068,300; 8,360,680; 7,690,864; 7,114,876B1; 6,857,815B2; 6,582,153
With other Patents Pending.

Printed in U.S.A.

**AEC FACTORY & HEADQUARTERS**

819 S. 5TH STREET
PARAGOULD, ARKANSAS 72450
870.236.7751
800.643.0095 (TOLL FREE (USA ONLY)

**MAILING**

PO BOX 819
PARAGOULD, ARKANSAS 72451

**ALLENENG.COM**

CONNECT WITH US ON SOCIAL